H 92037 MONROE; THIRD TO FOURTH
H 92046 ALLEY IMPROVEMENTS

MUSKEGON

West Michigan's Shoreline City

www.shorelinecity.com

Project Engineer: Leo Evans

City of Muskegon

Department of Public Works

TABLE OF CONTENTS

INTRODUCTION
INVITATION FOR BIDS 2
NOTICE OF REQUIREMENT FOR AFFIRMATIVE ACTION 3
DEFINITIONS 4

PART 1 - BIDS
SECTION 1 – INSTRUCTIONS TO BIDDERS 7
1.0 INSTRUCTIONS TO BIDDERS 8
SECTION 2 - BID PROPOSAL 14
1.1 CONTRACT BIDDER'S CHECKLIST 15
1.2 TRANSMITTAL LETTER FOR BID PROPOSAL 16
1.3 BIDDER CERTIFICATION & AGREEMENT 17
1.4 BID BOND 19
1.5 NON-COLLUSION AFFIDAVIT OF PRIME BIDDER 21
1.6 LIST OF PROPOSED SUBCONTRACTORS 22
1.7 DISADVANTAGED CONTRACTOR AFFIDAVIT 23
1.8 STATEMENT OF BIDDER'S QUALIFICATIONS 24
1.9 DBE/MBE/WBE PROCUREMENT POLICY 26
1.10 BID TABULATUION 29

PART 2 - AGREEMENT
2.0 AWARDEE CHECKLIST 36
2.1 DIRECTIONS FOR PREPARATION 37
2.2 AGREEMENT 38
2.3 PERFORMANCE BOND 40
2.4 LABOR & MATERIALMAN'S BOND 42
2.5 NON-COLLUSION AFFIDAVIT OF SUBCONTRACTOR 44
2.6 LETTERS OF RECOMMENDATION IN LIEU OF PERFORMANCE BOND 45

PART 3 – GENERAL SPECIFICATIONS
SECTION 1 – PROJECT PERFORMANCE 47
3.0 PROJECT PERFORMANCE 48
3.1 TIME CHANGE ORDER 64
3.2 CONTRACT CHANGE ORDER 65
3.3 CONTRACTOR'S CERTIFICATE & RELEASE REQUEST FOR FINAL PAYMENT 66
3.4 CONTRACTOR AFFIDAVIT - SURETY RELEASE 68
3.5 CONSENT OF SURETY 69
SECTION 2 70
3.6 AFFIRMATIVE ACTION 71
SECTION 3 72
3.7 ADOPTED LABOR STANDARDS PROVISIONS 73
3.8 EQUAL OPPORTUNITY CLAUSE 74
3.9 ANTI-KICKBACK ACT 75
SECTION 4 76
3.10 PREVAILING WAGE DECISION 77

PART 4 – ENGINEERING SPECIFICATIONS

DIVISION 1 GENERAL DEFINITIONS 79
DIVISION 2 MATERIALS 81
DIVISION 3 CONCRETE 85
DIVISION 4 ROADWAY EARTHWORK 87
DIVISION 5 REMOVING EXISTING STRUCTURES 89
DIVISION 9 CONCRETE CURB AND GUTTER 91
DIVISION 10 CONCRETE DRIVEWAY 93
DIVISION 11 CONCRETE SIDEWALK 95
DIVISION 12 SEWERS 97
DIVISION 13 WATERMAINS 105
DIVISION 14 MANHOLES AND CATCH BASINS 125
DIVISION 15 HOT MIX ASPHALT 128
DIVISION 16 MISCELLANEOUS 131
DIVISION 17 PUBLIC UTILITIES 141

PART 5 - SPECIAL SPECIFICATIONS

ALL PAY ITEMS 145
UTILITY COORDINATION 146
PROGRESS CLAUSE 147
PAVT, REM, MODIFIED 148
MACHINE GRADING, MODIFIED 149
SEWER, PVC SDR 35, __INCH, TR DET B, MODIFIED 151
SEWER BULKHEAD, __INCH, MODIFIED 153
SEWER LATERAL, PVC SDR 35, __ INCH, TR DET B, MODIFIED 154
SEWER WYE, PVC SDR 35, __ INCH X __INCH 156
DR STRUCTURE COVER, ADJ, CASE 1, MODIFIED 157
HMA ACCEPTANCE ON LOCAL AGENCY PROJECTS 158
HYDROSEEDING 165
CUT AND CAP, __ INCH WATERMAIN 166
1 INCH WATER SERVICE, CORP AND CURB STOP 167
WATERMAIN & FITTINGS 169
WATER SERVICES, PRIVATE PROPERTY & BUILDING CONNECTION 178
ABOVE GROUND VIDEO SURVEY 182
SOIL BORING REPORT - MONROE STREET 184

PART 6 - MDOT SPECIFICATIONS

R-1-G DRAINAGE STRUCTURES 188
R-7-F COVER B 197
R-9-D COVER D 199
R-15-F COVER K 201
R-28-J SIDEWALK RAMP AND DETECTABLE WARNING DETAILS 204
R-29-I DRIVEWAY OPENINGS & APPROACHES AND CONC SIDEWALKS 211
R-30-G CONCRETE CURB AND CONCRETE CURB & GUTTER 215
R-83-C UTILITY TRENCHES 217
R-96-E SOIL EROSION & SEDIMENTATION CONTROL MEASURES 222

APPENDICIES

PRE-BID DOCUMENTS ....Appendix Page
PRE-BID MEETING MINUTES ....Appendix Page
SIGNED BIDDER DOCUMENTS ....Appendix Page

TRANSMITTAL LETTER FOR BID PROPOSAL ..... *Appendix Page*
BIDDER CERTIFICATION AND AGREEMENT ..... *Appendix Page*
BID TABULATION ..... *Appendix Page*
BID BOND PROPOSAL ..... *Appendix Page*
GENERAL POWER OF ATTORNEY ..... *Appendix Page*
NON-COLLUSION AFFIDAVIT OF PRIME BIDDER ..... *Appendix Page*
LIST OF PROPOSED SUBCONTRACTORS ..... *Appendix Page*
DISADVANTAGED CONTRACTOR AFFIDAVIT ..... *Appendix Page*
SIGNED AGREEMENT DOCUMENTS ..... Appendix Page
AGREEMENT ..... *Appendix Page*
PERFORMANCE BOND ..... *Appendix Page*
LABOR & MATERIALMAN'S BOND ..... *Appendix Page*
POWER OF ATTORNEY ..... *Appendix Page*
NON-COLLUSION AFFIDAVIT OF SUBCONTRACTOR ..... *Appendix Page*
CERTIFICATE OF LIABILITY INSURANCE ..... Appendix Page
ATTORNEY APPROVAL LETTER ..... Appendix Page

INTRODUCTION

INVITATION FOR BIDS

Project: H92037 Monroe, Third to Fourth AND H92046 Alley Improvements

The City of Muskegon, Michigan will receive sealed bids until 2:00 p.m. local time on Tuesday, April 13, 2021, at the City Clerk's Office, City Hall, 933 Terrace Street, Muskegon, Michigan, at which time and place all bids will be publicly opened and read aloud for the following items of work to include:

Construction includes 800 feet of pavement removal and replacement, 400 feet of water main replacement, 400 feet of storm sewer replacement, concrete curb and gutter replacement and various other concrete items in the City of Muskegon, Muskegon County.

Electronic copies of Plans and Specifications may be obtained on or after Friday, January 3, 2020 from the City of Muskegon website, or by request to the Engineering Department via phone or email; 231.724.6707 or engineering@shorelinecity.com. Printed copies can be obtained by request from the Engineering Department located at 1350 E. Keating Ave, Muskegon MI, 49442 for a cost of $40.

An amount equal to five percent (5%) of the Bid must be submitted with each Bid Proposal in one of three forms acceptable to the City of Muskegon.

Contract documents may be examined at the following locations:

- Public Services Building, 1350 E. Keating Ave., Muskegon MI 49442
- City of Muskegon website: www.shorelinecity.com
- Grand Rapids Builders Exchange

Attention is called to the fact that the City requires: the Contractor consider hiring local work force insofar as possible, not less than the salaries and wages set forth in the Specifications must be paid, 14% minority and 6.9% female are the goals established for participation in each trade, the Contractor must ensure employees and applicants for employment are not discriminated against based upon their race, creed, color, religion, sex, national origin, handicapped condition nor veteran background, and all pertinent regulations must be complied with. Bids may not be withdrawn within sixty (60) days after bid opening. The City of Muskegon reserves the right to reject any or all bids or to waive any informalities or irregularities in the bidding.

A non-mandatory Pre-Bid Conference will be held in the Conference Room at the City of Muskegon Department of Public Works Building located at 1350 E Keating Avenue at 10:00am on Wednesday, March 31, 2021, at which time and place any questions regarding this Project should be presented. Minutes from the Pre-Bid Conference will become an Addendum to the Contract.

CITY OF MUSKEGON, MICHIGAN
By: Ann Meisch, City Clerk

PUBLISH: 03/19/2021

ADA POLICY

The City will provide necessary appropriate auxiliary aids services, for example, signers for the hearing impaired, audio tapes for the visually impaired, etc., for disabled persons who want to attend the meeting, upon twenty-four hour notice to the City. Contact:

Ann Meisch, City Clerk
City of Muskegon, City Hall
933 Terrace Street, Muskegon, MI 49440
(231) 724-6705 or TDD (231) 724-6773

NOTICE OF REQUIREMENT FOR AFFIRMATIVE ACTION

Executive Order 11246

1. The Bidder's attention is called to the "Equal Opportunity Clause" and the "Standard Adopted Equal Employment Specifications" set forth in Part 3, Section II, of these Documents.

2. The goals and the timetables for minority and female participation, expressed in percentage terms for the Contractor's aggregate workforce in each trade on all construction work in the covered area, are as follows:

GOALS FOR PARTICIPATION IN EACH TRADE

TRADE	MINORITY	FEMALE
ALL	**14%**	**6.9%**

These goals are applicable to all the Contractor's construction work (whether or not it is Federal or Federally-assisted) performed in the covered area. If the Contractor performs construction work in a geographical area located outside of the covered area, it shall apply the goals established for such geographical area where the work is actually performed. With regard to this second area, the Contractor also is subject to the goals for both its federally involved and non-federally involved construction.

The Contractor's compliance with the Executive Order and regulations in 41 CFR Part 60-4 shall be based on its implementation of the Equal Opportunity Clause, specific affirmative action obligations required by the specifications set forth in 41 CFR 60-4.3(a), and its efforts to meet the goals. The hours of minority and female employment and training must be substantially uniform throughout the length of the Contract, and in each trade, and the Contractor shall make a good faith effort to employ minorities and women evenly on each of its projects. The transfer of minority or female employees or trainees from contractor to contractor or from project to project for the sole purpose of meeting the contractor's goals shall be a violation of the Contract, the Executive Order, and the regulations in 41 CFR Part 60-4. Compliance with the goals will be measured against the total work hours performed.

3. The Contractor shall provide written notification to the Director of the Office of Federal Contract Compliance Programs within 10 working days of award of any construction subcontract in excess of $10,000 at any tier for construction work under the Contract resulting from this solicitation. The notification shall list the name, address and telephone number of the subcontractor; employer identification number of the subcontractor; estimated dollar amount of the subcontract; estimated starting and completion dates of the subcontract; and the geographical area in which the contract is to be performed.

4. As used in this Notice, and in the Contract resulting from this solicitation, the "covered area" is the City of Muskegon, County of Muskegon, and State of Michigan.

DEFINITIONS

Whenever used anywhere in these Documents, the following meanings shall be given to the terms defined:

ADDENDA or ADDENDUM – Any changes, revisions, additions or clarifications of or to the Contract Documents which have been duly issued by the City to Bidders prior to the time of awarding or executing the Contract Agreement.

AUTHORIZED REPRESENTATIVE – Any person or persons authorized to represent the City of Muskegon by its governing body for the purpose of directing or having in charge the work embraced in this Contract, acting directly or indirectly through the responsible party having general charge of this work, and/or for monitoring, coordinating and inspecting the work and activities involved.

BID or BID PROPOSAL – The written offer of the Bidder, on the form furnished by the City, for the work proposed.

BID BOND/GUARANTY – The security required in these Documents and furnished by the Bidder as a guaranty of good faith to enter into a contract for the work proposed.

BIDDER or PRIME BIDDER – That individual, corporation or firm submitting a proposal for consideration by the City to perform the work proposed in these Documents.

CITY – CITY OF MUSKEGON - The City of Muskegon and/or its authorized representative(s); also may be referred to in portions of these Documents as owner, grantee, local public agency, or local government.

CITY COMMISSION – The governing body of the City of Muskegon which retains the right of final approval of all contractors, subcontractors, contracts and payments under any contracts.

CONTRACT – The Agreement executed by the City and the Contractor, of which this section is a part.

CONTRACT DOCUMENTS – Means and shall include the executed Agreement, any Addenda, Invitation for Bids, Instructions to Bidders, signed Bid Proposal, all Parts and Sections of the General, Technical and/or Special Specifications, any drawings, maps, plans, etc., and any forms or formats and documents included within the book forming these Documents.

CONTRACT PERFORMANCE – The act of complying with these Contract Documents to the successful completion of the Project by performing the work necessary to do so.

CONTRACT PRICE – That figure agreed upon through the bidding procedure as acceptable to the City and indicated as such in the Agreement executed by the Contractor and the City.

CONTRACT TIME – The date for completion or length of time until completion, of the work embraced in this Contract as stipulated in the Agreement executed by the Contractor and the City.

CONTRACTOR or SUCCESSFUL BIDDER – The person, corporation or firm whose bid was accepted by the City, resulting in the execution of the Agreement to perform the work under the terms of these Documents.

DRAWINGS/PLANS – Approved drawings or reproduction of drawings pertinent to the construction or details of the work covered by this Contract.

LABORATORY – The testing laboratory of the City or any other laboratory which may be designated by the City for the purpose of inspecting, examining and determining the suitability of materials and the quality of the products used in the performance of this Contract.

LETTERS OF RECOMMENDATION – IN LIEU OF PERFORMANCE BOND – Those statements presented by the Bidder to the City for consideration in lieu of a performance bond where applicable and in strict accordance with Part 1, Section I, paragraph 17(e), and the instructions in these Documents.

PERFORMANCE/LABOR AND MATERIALMEN'S BONDS – The statutory bonds, executed by the Contractor and a surety, guaranteeing the performance of the Contract and the payment of all lawful indebtedness pertaining thereto.

PREVAILING WAGE DECISION - That document, received from the U.S. Department of Housing and Urban Development or the State of Michigan Department of Labor as requested by the City, detailing the current wage rates which, if included in this Contract, are binding upon the Contractor and all subcontractors as the minimum wages to be paid during the life of this Contract.

SITE – Also referred to as PROJECT SITE or PROJECT AREA, indicating the location of the Project as generally described in these Documents.

SUBCONTRACT – An agreement executed by the Contractor with another individual, corporation or firm for work or a portion of the work embraced in this Contract. (An asterisk (*) in the right-hand margin indicates subcontract language or requirements throughout Parts 1, 2 and 3 of these Documents.)

SUBCONTRACTOR – A person, corporation or firm supplying labor and/or materials for work at the Site of this Project for the Contractor under a Subcontract.

SURETY – The corporate body which is bound with and for the Contractor for the performance of this contract and for the payment of all lawful indebtedness pertaining thereto.

SPECIFICATIONS – GENERAL – Refers to specifications pertinent to the performance of any City Project anticipated to exceed $2,000, as provided in Parts 1, 2 and 3 of these Documents.

SPECIFICATIONS – TECHNICAL – Refers to those Specifications pertinent to this Project and includes information regarding materials, products, etc., as provided in PART 4 of these Documents.

SPECIFICATIONS – SPECIAL – Refers to special information items pertinent to only this Project and includes Project Description, location, measurements, maps, drawings, etc.

SPECIFICATIONS – (without particular included as above) Refers to General Specifications, Technical Specifications and/or Special Specifications outlined in this Document.

WORK ON (OR AT) THE PROJECT or PROJECT SITE – Work to be performed under this Contract at the location of this Project, including transportation of materials and supplies to or from the Site by employees of the Contractor and/or Subcontractors.

PART 1 - BIDS

SECTION 1 – INSTRUCTIONS TO BIDDERS

1.0 INSTRUCTIONS TO BIDDERS

1.0.1 BIDS

a. Bidding documents to be submitted must remain attached within this Contract Document.
b. All bids submitted shall be on forms provided without alterations or interlineations and shall be subject to all requirements of these Instructions to Bidders and all the forms and Documents immediately following these Instructions in Section 2, Bid Proposal.
c. All Bid Proposals submitted for consideration shall be enclosed in a sealed envelope which is clearly labeled "Bid Documents" with the Project name and/or number, the name of Bidder, the date and time of Bid Opening written on the envelope to prevent premature opening.
d. If unit prices are requested, the Unit Price for each of the several items in the Bidder's proposal shall include its pro rata share of overhead so that the sum of the products obtained by multiplying the quantity for each item by the unit price represents the total bid. Should conditions make it necessary to revise the quantities, a limit will then be fixed for such increased or decreased quantities. Should the net monetary value of all such changes increase or decrease the original price by more than twenty-five percent (25%) negotiated price change shall be allowed, if warranted. Any bid not conforming to this requirement may be rejected.

1.0.2 BID GUARANTY

a. No Bid will be considered unless it is accompanied by a Bid Guaranty of not less than five percent (5%) of the amount of the Bid to ensure the execution of the Contract and the furnishing of surety bond or bonds by the successful Bidder, as required by the Contract Documents. Cash deposits will not be accepted. Negotiable U.S. Government Bonds (at par value) and certified checks or bank drafts, made payable to the **City of Muskegon**, may be used, or a bid bond in the format provided which shall be secured by a guaranty or a surety company listed in the latest issue of U.S. Treasury Circular 570, and shall be within the maximum amount specified for such company in said Circular.
b. Revised Bids submitted before the opening of Bids, whether forwarded by mail or telegraphic communication, if representing an increase in excess of two percent (2%) of the original bid, must have the Bid Guaranty adjusted accordingly; otherwise the Bid will not be considered.
c. The Bid Guaranty of unsuccessful Bidders, or the amount thereof, will be returned as soon as practicable after the awarding of the contract. The Bid Guaranty of any Bidder withdrawing his/her Bid in accordance with the conditions set forth in Paragraph 13 hereof will be returned promptly.
d. When telegraphic modifications of Bids are received as provided above, Bidders are cautioned that such modifications shall make the Bid as modified or amended subject to rejection if not explicit and/or in any sense are subject to misinterpretation.

1.0.3 ALTERNATIVE BIDS

No alternative bids will be considered unless alternative bids are specifically requested.

1.0.4 INTERPRETATIONS AND/OR ADDENDA

a. No oral interpretation will be made to any Bidder as to the meaning of the Documents or any part thereof. A request for any interpretation will be in writing to the City of Muskegon, and any such request received seven (7) or more days before the scheduled Bid Opening will be considered.
b. Every interpretation made will be in writing in the form of an Addendum to the Contract itself and, when issued, will be on file in the City Clerk's office at least five (5) days prior to the Bid Opening for each Bidder's review.

1.0.5 BIDDER'S RESPONSIBILITIES

a. Site Inspection. Each Bidder will assume the responsibility for visiting the site of the proposed work and for fully acquainting himself/herself with the conditions existing there relating to construction and labor, and should fully inform himself/herself as to the facilities involved, the difficulties and restrictions attending the performance of the Contract.
b. Knowledge of Bid and Contract Documents. The Bidder is responsible for thoroughly examining and familiarizing himself/herself with the Bid and Contract Documents, any Drawings, Specifications and Addenda.
c. Addenda to Contract Documents. All Bidders will assume the responsibility to make inquiry as to the Addenda issued, knowing that all such Addenda become part of the Contract. All Bidders shall be bound by any Addenda whether or not it was received or reviewed.
d. Claims on Basis of Failure to Receive or Review Information. A successful Bidder, through the execution of this Contract, shall in no way be relieved of any obligation due to his/her failure to receive or examine any form or legal instrument, or due to the failure to visit the site and acquaint himself/herself with the existing conditions.
The City Commission will be justified in rejecting any claims submitted on the basis of 5.a, b, or c above.

1.0.6 EQUAL OPPORTUNITY EMPLOYMENT REQUIREMENT - The attention of Bidders is particularly called to the requirement for ensuring that employees and applicants for employment are not discriminated against because of their race, color, religion, sex or national origin, nor because the employee or applicant is a disabled or Viet Nam era veteran or otherwise handicapped, as outlined in Part 3, Section 2 of these Documents.

1.0.7 EMPLOYMENT AND PREVAILING WAGE AND SALARY REQUIREMENTS - The attention of Bidders is particularly called to the requirements covered in Part 3, Section 4 of these Documents concerning the payment of not less than the prevailing wage and salary rates specified, and in regard to the conditions of employment with respect to certain categories and classifications of employees. These rates of pay are the minimums to be paid during the life of this Contract.

The City of Muskegon requires that the Contractor must hire local trades and labor employees from the City of Muskegon, County of Muskegon and/or this SMSA (Standard Metropolitan Statistical Area) for the duration of this Project, insofar as these are available to perform the necessary work. Supervisory and/or technical staff officials are exempt from this requirement.

It is therefore the responsibility of the Bidder to inform himself/herself as to local labor conditions, labor supply, overtime compensation, health and welfare contributions, and prospective changes or adjustments of rates.

1.0.8 SUBCONTRACTORS* - Any Bidder submitting a Bid shall include a list of proposed subcontractors on the form provided in Part 1, Section 2 of these Documents.

The attention of Bidders is called to the Contractor's liability for all subcontractors as provided in the various sections and paragraphs on these Documents, generally indicated by an asterisk (*) in the right-hand margin.

1.0.9 NON-COLLUSION AFFIDAVIT

a. Each Bidder submitting a bid for work, or any portion thereof, covered by these Documents, shall execute an Affidavit to the effect that he/she has not colluded with any other person, firm or

corporation in regard to any Bid submitted, in the same or similar format as provided in Part 1 Section 2 of these Documents.

b. The successful Bidder shall secure an Affidavit to the same effect from any proposed subcontractor, before executing any subcontract, in the same or similar format as provided in Part 1, Section 2 of these Documents.

1.0.10 SECTION 3 CLAUSE (135.38) FOR FEDERALLY FUNDED PROJECTS

a. The work to be performed under this contract is subject to the requirements of section 3 of the Housing and Urban Development Act of 1968, as amended, 12 U.S.C. 1701u (section 3). The purpose of section 3 is to ensure that employment and other economic opportunities generated by HUD assistance or HUD-assisted projects covered by section 3, shall, to the greatest extent feasible, be directed to low- and very low-income person, particularly persons who are recipients of HUD assistance for housing.
b. The parties to this contract agree to comply with HUD's regulations in 24 CFR part 135, which implement section 3. As evidenced by their execution of this contract, the parties to this contract certify that they are under no contractual or other impediment that would prevent them from complying with the part 135 regulations.
c. The contractor agrees to send to each labor organization or representative or worker with which the contractor has a collective bargaining agreement or other understanding, if any, a notice advising the labor organization or workers' representative of the contractor's commitments under this section 3 clause, and will post copies of the notice in conspicuous places at the work site were both employees and applicants for training and employment positions can see the notice. The notice shall describe the section 3 preference, shall set forth minimum number and job titles subject to hire, availability of apprenticeship and training positions, the qualifications for each of the positions; and the anticipated date the work shall begin.
d. The contractor agrees to include the section 3 clause in every subcontract subject to compliance with regulations in 24 CFR part 135, and agrees to take appropriate action, as provided in an applicable provision of the subcontract or in the section 3 clause, upon the finding that the subcontractor will not subcontract with any subcontractor where the contractor has notice or knowledge that the subcontractor has been found in violation of the regulations in 24 CFR part 135.
e. The contractor will certify that any vacant employment positions, including training positions, that are filled (1) after the contractor is selected but before the contract is executed, and (2) with person other than those to whom the regulations of 24 CFR part 135 require employment opportunities to be directed, were not filled to circumvent the contractor's obligations under the 24 CFR part 135.
f. Noncompliance with HUD's regulations in 24 CFR, part 135 may result in sanctions, termination of this contract for default, and debarment or suspension from future HUD assisted contracts.
g. With respect to work performed in connections with section 3 covered Indian housing assistance, section 7(b) of the Indian Self-Determination and Education Assistance Act (25 U.S.C. 450e) also applies to the work to be performed under this contract. Section 7(b) requires that to the greatest extent feasible (i) preference and opportunities for training and employment shall be given to Indians, and (ii) preference in the award of contracts and subcontracts shall be given to Indian organizations and Indian-owned Economic Enterprises. Parties to this contract that are subject to the provisions of section 3 and section 7(b) agree to comply with section 3 to the maximum extent feasible, but not derogation of compliance with section 7(b).

Examples:

1. Who are Section 3 residents? – Residents of public housing and low income person who live in the area in which a HUD-assisted project is located.
2. What is a Section 3 business? – A business that is owned by Section 3 residents; or employs Section 3 residents in full-time positions; or subcontracts with businesses which provide economic opportunities to low income persons. (CDBG)
3. What types of economic opportunities are available under Section 3? – a. Administrative/Management: accounting, bookkeeping, payroll, purchasing, research, word processing b. Services: appliance repair, carpet installation, catering computer/information, florists, janitorial, landscaping, manufacturing, marketing, photography, printing, transportation C. Construction: architecture, bricklaying, carpentry, cement/masonry,
   demolition, drywall, electrical, elevator construction, engineering, fencing, heating, iron works, machine operation, painting, plastering, plumbing, surveying, tile setting.
4. Who will award the economic opportunities? – Recipients of HUD financial assistance and their contractors and subcontractors are required to provide economic opportunities to the greatest extent feasible, consistent with existing Federal, State and local laws and regulations.
5. Who receives priority under Section 3? – a. For training and employment: persons in public and assisted housing; person in the neighborhood; participants in HUD Youthbuild programs; homeless person b. For contracting: business which fit the definition of a Section 3 business.
6. How can businesses find Section 3 residents to work for them? - By recruiting in the neighborhood and public housing developments to tell them about available training and job opportunities. Distributing flyers, posting signs, placing ads, and contacting resident organizations and local community development and employment agencies to find potential workers are a few effective ways of getting jobs and people together.
7. How can businesses & low income people find out more about Section 3? Contact the Fair Housing and Equal Opportunity representative at your nearest HUD office.
8. What if it appears an entity is not complying with Section 3? - There is a complaint process. Section 3 residents and business concerns may file complaints if they think a violation of Section 3 requirements has occurred where HUD-funded project is planned or underway. Complaints will be investigated; if appropriate, voluntary resolutions will be sought. A complaint that cannot be resolved voluntarily can result in an administrative hearing.
9. Will HUD require compliance? – Yes. HUD investigates complaints and monitors the performance of recipients and contractors. HUD examines employment and contract records for evidence of actions taken to train and employ Section 3 residents and train and employ Section 3 residents and to award contracts to Section 3 businesses.
10. How can Section 3 businesses or residents complain about a violation of Section 3 requirements? – They can file a complaint in writing to the local HUD Office or to: The Assistant Secretary for Fair Housing and Equal Opportunity, U.S. Department of Housing and Urban Development 451 Seventh Street, SW, Rm. 5100 Washington, DC 20410-2000. A written complaint should contain:
    a. Name and address of the person filing the complaint;
    b. Name and address of subject of complaint (HUD recipient contractor);
    c. Description of acts or omissions in alleged violation of section 3;
    d. Statement of corrective action sought.

1.0.11 STATEMENT OF BIDDER'S QUALIFICATIONS; ADDITIONAL INFORMATION

a. Upon request, each Bidder shall submit a Statement of Bidder's Qualifications in accordance with the information requested in Part 1, Section 2, and, when specifically requested by the City, shall submit a detailed Financial Statement, particularly in lieu of a Performance Bond.

b. Any Bidder shall furnish any data and information requested by the City Commission in its attempt to determine the ability of the Bidder to perform his/her obligations under the Contract.

1.0.12 TIME FOR RECEIVED BIDS - Bids received prior to the advertised hour of opening will be kept securely sealed. The official whose duty it is to open the Bids will decide when the specified time has arrived, and no Bid received thereafter will be considered.

1.0.13 WITHDRAWAL OF BIDS - Bids may be withdrawn on written or telegraphic request dispatched by the Bidder in time for delivery in the normal course of business prior to the time fixed for opening; provided that written confirmation of any telegraphic withdrawal over the signature of the Bidder is placed in the mail and post-marked prior to the time set for Bid opening.

1.0.14 OPENING OF BIDS - At the time and place fixed for the opening of Bids, the City Clerk will cause to be opened and publicly read aloud every Bid received within the time set for receiving Bids, irrespective of any irregularities therein. Bidders and other persons properly interested may be present in person or by representative.

1.0.15 AWARD OF CONTRACT - If the Contract is awarded, it will be awarded to the responsible Bidder submitting the lowest Bid complying with the conditions set forth in these Documents. The successful Bidder will be notified at the earliest possible date.

1.0.16 REJECTION OF BIDS; CITY'S RIGHTS

a. The City Commission reserves the right to reject any and all Bids, and to waive any informality in Bids received, whenever such rejection or waiver is in its own best interest.
b. The City Commission may consider as irregular and reject any Bid on which there is an alteration.
c. The City Commission shall have the right to take such steps as it deems necessary to determine the ability of the Bidder to perform his/her obligations under the Contract.
d. The right is reserved to reject any Bid where an investigation of the available evidence and/or information provided does not satisfy the City Commission of the Bidder's capacity to carry out the terms of the Contract.

1.0.17 EXECUTION OF CONTRACT AGREEMENT; PERFORMANCE AND PAYMENT BONDS

a. Subsequent to the award and within ten (10) days after the Documents have been presented for signature, the successful Bidder shall execute the Agreement and deliver the requested number of copies to the City of Muskegon.
b. Execution of the Agreement will require completion of the work in accordance with the Contract in its entirety.
c. Upon delivery of the executed Contract Documents, the successful Bidder shall furnish the requisite bonds, in the penal sum not less than the amount of the Contract as awarded, as security for the faithful performance of the Contract and of the payment of all persons, firms or corporations to whom the Bidder as Contractor may become legally indebted, except as provided in paragraph (e) below.
d. Such bonds shall be completed in accordance with the Instructions in Part 1 Section 2, and shall bear the same date as, or a date subsequent to, that of the Agreement.
   The surety bond shall be signed by a guaranty or the surety company listed in the latest issue of the U.S. Treasury Circ. 570, and the penal sum shall be within the maximum specified for such company in said Circular.
e. In cases where this Contract is $50,000 OR LESS and the successful Bidder is unable to, or chooses not to, provide the appropriate Performance Bonds, the Bidder may submit four letters of sincere

recommendation as to his/her prior performance to the City Manager for consideration in lieu of a Performance Bond, in basically the form described in Part 2 of these Documents.

This action must be taken prior to the execution of the Contract Agreement and the four letters must be accompanied by a statement from the Bidder, which contains the minimum requirements indicated for "Statement of Bidder's Qualifications". Upon City Manager and/or City Commission acceptance of the letters in lieu of the Performance Bond, the Contract Agreement shall be so executed.

f. Failure of the successful Bidder to execute such number of Contract Documents as requested, to supply the required bonds or letters of recommendation with the Bidder's statement, and/or to meet the prescribed time limits, shall constitute a default.

g. Upon such default, the City Commission may either award the Contract to the next lowest responsible bidder or re-advertise for bids.

   The Commission may further charge against the defaulting Bidder the difference between the amount of his/her Bid and the amount for which a Contract for the work is subsequently executed, irrespective of whether the amount then exceeds the amount of the Bid Bond.

   If a more favorable bid is received by re-advertising, the defaulting Bidder shall have no claim against the City of Muskegon.

1.0.18 COMMENCEMENT NOTICE TO PROCEED - The Contractor shall commence work only upon delivery of a Notice to Proceed from the City. In the event the said notice is not delivered within ten (10) days of the date of this agreement, then the dates for completion and any other performance dates shall be adjusted without further agreement so that the performance and completion dates shall be delayed the number of days in excess of ten (10) after the execution of the contract during which the City did not deliver the notice.

SECTION 2 - BID PROPOSAL

1.1 CONTRACT BIDDER'S CHECKLIST

THIS FORM IS A REFERENCE TOOL FOR BIDDING CONTRACTORS

The following forms ***MUST*** be completed:

	Completed?	
	Yes	No
1. Transmittal Letter for Bid Proposal (must acknowledge addenda received)		
2. Bidder Certification and Agreement		
3. Management Plans Questionnaire		
4. Bid Proposal		
5. Bid Bond (must be 5% of total bid)		
6. Non-Collusion Affidavit of Prime Bidder		
7. List of Proposed Sub-Contractors (if applicable)		
8. Disadvantaged Contractor Affidavit (if applicable)		
9. Statement of Bidders Qualifications (if applicable)		
10. Bid Tabulation Spreadsheet(s)		

Actual Completion of All Required Forms is the **Sole Responsibility of the Bidder**

FAILURE TO COMPLETE THE NECESSARY FORMS MAY RESULT IN BID REJECTION

1.2 TRANSMITTAL LETTER FOR BID PROPOSAL

Bidder/Company Name _____

Name & Title of Head of Company _____

Street Address _____

City, State, ZIP _____

Phone Number _____

Email Address _____

Date _____

CITY OF MUSKEGON, MICHIGAN
933 TERRACE ST.
MUSKEGON, MI 49443-0536

Dear Awarding Agent,

Having examined the Bid Specifications and Contract Documents, including all forms and instructions, and the site of the proposed work, and being familiar with all of the conditions surrounding the construction of the proposed project, including the availability of materials and labor, and having received and reviewed the following Addenda:

_____

_____

_____

I/We hereby propose to furnish all labor, materials and supplies, and to construct the project in accordance with the Contract Documents and at the prices indicated in the attached Bid Proposal. Submitted prices are to cover all expenses incurred in performing the work required under the Contract Document, of which this letter and attached Proposal are a part.

In accordance with the Instructions to Bidders, all appropriate documents, forms, etc., have been properly completed and are attached hereto, along with the Bidder Certification and Agreement, List of Subcontractors, Non-Collusion Affidavits, and the proper Bid Guaranty.

I/We hereby respectfully submit the attached Bid Proposal for consideration by the City of Muskegon on the above-referenced Project.

_____
Signature of Bidder/Representative

_____
Printed Name and Title

1.3 BIDDER CERTIFICATION AND AGREEMENT

PART I.

The Undersigned hereby agrees:

That he/she has examined the Bid Specifications/Contract Documents, including specifications, forms and instructions;

That he/she has received and reviewed the following Addenda:

_____

_____

_____

That he/she has examined the Site of the proposed work and is familiar with all of the conditions surrounding the construction of the proposed project and the availability of materials and labor.

PART II. The Undersigned hereby agrees:

That he/she will enter into a contract to furnish the labor, materials, tools and construction equipment necessary for the full and complete execution of the work at and for the prices indicated in his/her official Bid Proposal, if said Proposal is accepted by the City;

That, at the time of execution of said Contract, he/she will furnish requisite bonds with such sureties (or letters of recommendation accompanied by a Bidder's Statement) for the faithful performance of the Contract, for the payment of all materials used therein, and for all labor expended thereon in accordance with the forms and instructions provided;

That he/she will construct the project in accordance with the Contract Documents within the specified time.

PART III. The Undersigned hereby agrees:

To commence work within 10 days after the date of the "Notice of Award" from the City.

To comply with all applicable Adopted Guidelines and requirements, wage rates, labor standards, equal opportunity requirements, subcontract (or) requirements, and any other specifications indicated or referred to within these Contract Documents.

The Undersigned herewith attaches an Affidavit in proof that he/she has not entered into a collusive agreement with any person in respect to this Bid or any other bid, or the submitting of bids for the Contract for which this Bid is submitted.

The Undersigned is prepared to submit a Statement of Bidder's Qualifications, a financial statement, and/or any information requested by the City.

However, once work has commenced the project shall be completed without interruption of normal working days unless authorized in writing by the Engineer.

PART IV

In regard to non-segregated facilities, the Undersigned certifies:

That he/she does not maintain or provide for any employees any segregated facilities at any of his/her establishments;

That he/she does not permit employees to perform their services at any location, under his/her control, where segregated facilities are maintained;

That he/she will not maintain or provide for employees any segregated facilities at any of his/her establishments, and that he/she will not permit employees to perform their services at any location under his/her control where segregated facilities are maintained.

The Undersigned hereby agrees:

That a breach of this section of the Bidders Certification will be a violation of the Equal Opportunity clause in any contract resulting from acceptance of this Bid.

That he/she will obtain identical certification from proposed sub-contractors prior to the award of subcontracts exceeding $10,000 which are not exempt from the provisions of the Equal Opportunity clause (unless already obtained for specific time periods), and that he/she will retain such certifications on file.

[As used in this section of this Bidder Certification, the term "segregated facilities" means any waiting rooms, work areas, restrooms, and washrooms, restaurants and other eating areas, time clocks, locker rooms and other storage or dressing areas, parking lots, drinking fountains, recreation or entertainment areas, transportation and housing facilities provided for employees which are segregated by explicit directive or are in fact segregated on the basis of race, color, religion or national origin, because of habit, local custom, or otherwise.]

NOTE: The penalty for making false statements in offers is prescribed in 18 U.S.C. 1001.

SIGNED: _____ DATED: _____

_____
(Printed name)

_____
(Title)

_____
_____ (Company/Bidder)

_____
(Company/Bidder Street Address)

_____
(Company/Bidder City, State Zip)

1.4 BID BOND

KNOW ALL MEN BY THESE PRESENTS, that we the undersigned,

_____ as PRINCIPAL, and
(Name of Principal)

_____ as SURETY are held
(Name of Surety)

and firmly bound unto the City of Muskegon, Michigan, in the penal sum of _____

_____dollars, ($_____) lawful money of the United States, for the payment of which sum well and truly to be made, we bind ourselves, our heirs, executors, administrators, successors, and assigns, jointly and severally, firmly by these presents.

THE CONDITION OF THIS OBLIGATION IS SUCH, that whereas the Principal has submitted the

Accompanying Bid, dated_____ , 20 _____ ,

for _____ .

NOW, THEREFORE, if the Principal shall not withdraw said Bid within the period specified for withdrawal; and shall within ten (10) days after the prescribed forms are presented for signature enter into a written Contract with the City of Muskegon in accordance with the Bid as accepted, and give bond with good and sufficient surety or sureties, as may be required for the faithful performance and proper fulfillment of such Contract; or

In the event of the withdrawal of said Bid within the period specified for withdrawal, or the failure to enter into such contract and give such bond within the time specified; and if the Principal shall pay the City of Muskegon the difference between the amount specified in said Bid and the amount for which the City of Muskegon may procure the required work or supplies or both, if the latter be in excess of the former.

THEN the above obligation shall be void and of no effect; otherwise shall remain in full force and virtue

IN WITNESS WHEREOF, the above-bounded parties have executed this instrument

Under their several seals this_____ day of_____, 20_____ the name and corporate seal of each corporate party being hereto affixed and these presents signed by its undersigned representative, pursuant to authority of its governing body.

In presence of

_____ _____(SEAL)
(Individual Principal)

_____
(Business Address including Zip Code)

_____
(Partnership)

_____
(Business Address including Zip Code)

Attest:

_____ _____

By:

(SEAL)

_____
(Corporate Principal)

_____
(Business Address including Zip Code)

Attest:

_____ _____

Affix
Corporate
Seal

Countersigned
By
Attorney-in-fact, State of _____

CERTIFICATE AS TO CORPORATE PRINCIPAL

I, _____, certify that I am the _____,

Secretary of the Corporation named as Principal in the within Bond; that

_____, who signed the said Bond on behalf of the Principal was then

_____of said Corporation; that I know his/her signature, and his/her signature thereto is genuine; and that said bond was duly signed, sealed, and attested to for and in behalf of said Corporation by authority of this governing body.

Affix
Corporate
Seal

By:_____

Title:_____

1.5 NON-COLLUSION AFFIDAVIT OF PRIME BIDDER

State of _____)
) ss.
County of _____)

_____ , being first duly sworn, deposes and says that:

1. He/She is _____
(owner, partner, officer, representative, agent)

   of _____ , the Bidder that has submitted the attached Bid to the City of Muskegon;

2. He/She is fully informed respecting the preparation and contents of the attached Bid and of all pertinent circumstances thereto;

3. Such Bid is genuine and is not a collusive or sham Bid;

4. Neither said Bidder nor any of his/her officers, partners, owners, agents, representatives, employees or parties in interest, including this affiant, has in any way colluded, conspired, connived or agreed, directly or indirectly, with any other Bidder, firm or person to submit a collusive or sham Bid in connection with the Contract for which the attached Bid has been submitted, or to refrain from bidding in connection with such Contract; nor has in any manner, directly or indirectly, sought by agreement, collusion, communication or conference with any other Bidder, firm or person to fix the price or prices in the attached Bid or any other bid; nor to fix any overhead, profit or cost element of the Bid price or the bid price of any other bidder; nor to secure through any collusion, conspiracy, connivance or unlawful agreement any advantage against the City of Muskegon or any person interested in the proposed Contract; and

5. The price or prices quoted in the attached Bid are fair and proper, and are not tainted by any collusion, conspiracy, connivance or unlawful agreement on the part of the Bidder or any part of its agents, representatives, owners, employees or parties in interest, including this affiant.

_____
Signature

_____
Printed Name and Title

Subscribed and sworn to before me

This _____day of _____, 20_____

_____

_____
Title

My Commission expires _____

1.6 LIST OF PROPOSED SUB-CONTRACTORS

To be submitted by each Bidder with Bid Proposal in accordance with Para. 8, Part 1, Section 1. Before a subcontract is executed by the successful Bidder, the subcontractor must be approved by the City of Muskegon and the required documents executed in accordance with the Contract Documents.

1. NAME OF FIRM _____

   FIRM ADDRESS _____

   _____

2. NAME OF FIRM _____

   FIRM ADDRESS _____

   _____

3. NAME OF FIRM _____

   FIRM ADDRESS _____

   _____

4. NAME OF FIRM _____

   FIRM ADDRESS _____

   _____

5. NAME OF FIRM _____

   FIRM ADDRESS _____

   _____

6. NAME OF FIRM _____

   FIRM ADDRESS _____

   _____

7. NAME OF FIRM _____

   FIRM ADDRESS _____

   _____

1.7 DISADVANTAGED CONTRACTOR AFFIDAVIT

Please provide the name(s) of all Disadvantaged subcontractors from whom you solicited bids for this project and additional information below.

Disadvantaged Contractor:	Contact Person:	Contact Method/Date:	Decision (Yes or No):
1._____	_____	_____	_____
2._____	_____	_____	_____
3._____	_____	_____	_____
4._____	_____	_____	_____

Of the Disadvantaged Contractors listed above, please indicate why they will not be used on this project.

Disadvantage Contractor:	Decision/Reason:
1._____	_____
	_____
2._____	_____
	_____
3._____	_____
	_____
4._____	_____
	_____

1.8 STATEMENT OF BIDDER'S QUALIFICATIONS

To be submitted by the Bidder upon specific request of City of Muskegon unless in connection with Letters of Recommendation in lieu of Performance Bond as provided in Section 1. The Statement of Bidder's Qualifications as follows must accompany the four Letters.

1.8.1 SUMMARY OF BIDDER'S INFORMATION TO BE PROVIDED

Each of the following items must be responded to in writing, and the information provided thereby must be clear and understandable. Upon completion, the Statement must be signed by the Bidder in front of a Notary Public and notarized. The Bidder may supply such additional information as desired after responding to each of these items:

1. NAME OF BIDDER (Company, individual, etc.)

2. PERMANENT MAIN OFFICE ADDRESS OF BUSINESS INCLUDING ZIP CODE.

3. DATE BUSINESS WAS ESTABLISHED.

4. IF A CORPORATION, WHERE WAS IT INCORPORATED?

5. NUMBER OF YEARS ENGAGED IN CONTRACTING BUSINES UNDER PRESENT NAME?
   FIRM OR TRADE NAME? UNDER A PREVIOUS NAME?

6. SCHEDULE OF OUTSTANDING CONTRACTS, showing amount of each contract and the anticipated completion date of each.

7. GENERAL CHARACTER OF WORK PERFORMED BY YOUR COMPANY.

8. HAS THIS COMPANY EVER FAILED TO COMPLETE ANY WORK AWARDED IT?
   If so, WHERE AND WHY?

9. HAS THIS COMPANY EVER DEFAULTED ON A CONTRACT?
   If so, WHERE ANY WHY?

10. LIST THE PROJECTS RECENTLY COMPLETED BY YOUR COMPANY, stating approximate cost of each and the month/year completed. Indicate which, if any, have provided your company with a Letter of Recommendation.

11. INDICATE EXPERIENCE IN CONSTRUCTION WORK SIMILAR TO THIS PROJECT.

12. LIST YOUR MAJOR EQUIPMENT AVAILABLE FOR THIS CONTRACT.

13. INDICATE BACKGROUND AND EXPERIENCE OF THE PRINCIPAL MEMBERS OF YOUR ORGANIZATION, INCLUDING OFFICERS.

14. INDICATE CREDIT AVAILABLE TO YOUR COMPANY.

15. LIST BANK REFERENCES. If a detailed financial statement is available attach it to this statement.

16. ARE YOU WILLING TO COMPLETE A DETAILED FINANCIAL STATEMENT AND FURNISH ANY OTHER INFORMATION REQUIRED AND REQUESTED BY THE CITY OF MUSKEGON?

17. INCLUDE THE FOLLOWING STATEMENT: "The undersigned hereby authorizes and requests any person, firm or corporation to furnish any information requested by the City of Muskegon in verification of the recitals comprising this Statement of Bidder's Qualifications."

18. INCLUDE THE FOLLOWING AT THE END OF YOUR STATEMENT:

    Dated this_____day of_____, 20____.

    COMPANY/BIDDER NAME

    SIGNATURE

    PRINTED NAME AND TITLE OF PERSON SIGNING

19. INCLUDE OFFICIAL NAME AND DATA FOR NOTARY PUBLIC TO NOTARIZE DOCUMENT.

1.9 DBE/MBE/WBE PROCUREMENT POLICY

1.9.1 POLICY STATEMENT: 2014-31 (e)

It is the policy of the City of Muskegon to assure that small disadvantaged business enterprises (DBE), minority business enterprises (MBE), and woman-owned business enterprises (WBE) are given the opportunity to participate in contracting and procurement for supplies, construction, equipment and services under federal contracts and collaborations.

This policy applies to all contracts/procurement for supplies, construction equipment and services under any federally contracted grant or cooperative agreement. The purpose is to ensure nondiscrimination in the solicitation, either by competitive bidding or negotiation, and award and administration of federally assisted contracts and collaborations.

Entities contracting or sub-contracting with the City of Muskegon shall comply with regulations relative to nondiscrimination in Federally-assisted programs as amended from time to time (hereinafter referred to as the Regulations), which are herein incorporated by reference and made a part of this contract.

During the performance of any contract, the contractor, for itself, its assignees and successors in interest (hereinafter referred to as the "contractor") agrees, as follows:

1.9.2 STATEMENT OF NON-DISCRIMINATION

The contractor, with regard to the work performed by it during the contract, shall not discriminate on the grounds of race, color, sex, or national origin in the selection, retention, and treatment of subcontractors, including procurements of supplies, construction, equipment and services.

1.9.3 FAIR SHARE GOALS

All methods of solicitation shall include the following language to meet "Good Faith Effort" requirements as stated in the general provisions of *EPA's 40 CFR 33* of the Federal Regulation:

> *This contract is subject to the Environmental Protection Agency's (EPA) "fair share policy," which includes EPA-approved "fair share goals" for Disadvantaged Business Enterprise (DBE), Minority Business Enterprise (MBE) and Woman Business Enterprise (WBE) firms in the Construction, Supplies, Equipment, and Services procurement categories. EPA's policy requires that applicants and prime contractors make a good faith effort to award a fair share of contracts, subcontracts and procurements to Minority Business Enterprise and Women-Owned Business Enterprise firms. Although EPA's policy does not mandate that the fair share goals be achieved, it does require applicants and prime contractors to demonstrate use of the six affirmative steps, and adhere to the current fair share goals for the State of Michigan.*

1.9.4 GOOD FAITH EFFORTS

(1) The City of Muskegon shall ensure DBE/MBE/WBEs are made aware of contracting opportunities to the fullest extent practicable through outreach and recruitment activities by maintaining a solicitation list of DBE/MBE/WBE businesses and notifying them whenever they are potential sources.

(a) Maintain and update a listing of qualified DBE/MBE/WBEs that can be solicited for construction, equipment, services and/or supplies on the City of Muskegon website.

(b) Provide listings to all interested parties who request copies of the bidding or proposing documents.

(c) Contact appropriate sources within our geographic area to identify DBE/MBE/WBEs for placement on our business listings.

(d) Utilize other DBE/MBE/WBE listings such as those of the States Minority Business Office, the Small Business Administration, Minority Business Development Agency (MBDA) of the Department of Commerce, EPA OSDBU, DOJ, HUD, DOT and Department of Homeland Security.

(e) Solicitation lists are available for review at all times via the city website.

(2) The City of Muskegon shall make information of forthcoming opportunities available to DBE/MBE/WBEs and arrange time for viewing of contracts and establish delivery schedules, where requirements permit, in a way that encourages and facilitates participation by DBEs, MBEs, and WBEs in the competitive process. This includes, whenever possible, posting solicitations for bids or proposals for a minimum of 30 calendar days(federal projects) and 10 calendar days(local projects), before the bid or proposal closing date.

(a) Develop realistic delivery schedules which may provide for greater DBE/MBE/WBE participation.

(b) Advertise through the minority media in order to facilitate DBE/MBE/WBE utilization. Such advertisements may include, but are not limited to, contracting and subcontracting opportunities, hiring and employment, or any other matter related to the project.

(c) Advertise in general circulation publications, trade publications, State agency publications and minority and women's business focused media concerning contracting opportunities on our projects. Maintain a list of minority and/or women's business-focused publications that may be utilized to solicit DBE/MBE/WBEs.

(3) The City of Muskegon will consider in the contracting process whether firms competing for large contracts could subcontract with DBE/MBE/WBEs. The City of Muskegon will divide total requirements when economically feasible and practical into smaller tasks or quantities in order to increase opportunities for participation by DBE/MBE/WBEs in the competitive process.

(a) Perform an analysis to identify portions of work that can be divided and performed by qualified DBE/MBE/WBEs.

(b) Scrutinize the elements of the total project to develop economical units of work that are within the bonding range of DBE/MBE/WBEs.

(c) Conduct meetings, conferences, and follow-ups with DBE/MBE/WBE associations and minority media to inform these groups of opportunities to provide construction, equipment, services and supplies.

(4) The City of Muskegon will consider and encourage contracting with a consortium of DBE/MBE/WBEs when a contract is too large for one of these firms to handle individually.

(a) Notify DBE/MBE/WBEs of future procurement opportunities so they may establish bidding solicitations and procurement plans.

(b) Provide DBE/MBE/WBEs trade organizations with succinct summaries of solicitations.

(c) Provide interested DBE/MBE/WBEs with adequate information about plans, specifications, timing and other requirements of the proposed projects.

(5) Use the services and assistance of the Small Business Administration (SBA) and the Minority Business Development Agency (MBDA).

(a) Use the services of outreach programs sponsored by the MBDA and/or the SBA to recruit bona fide firms for placement on DBE/MBE/WBE bidder's lists to assist these firms in the development of bid packaging.

(b) Seek out Minority Business Development Centers (MBDCs) to assist recipients and prime contractors in identifying DBE/MBE/WBEs for potential work opportunities on projects

(6) If the prime contractor awards subcontractors, the prime contractor is required to take the steps in subparagraphs (1)-(5) of this section.

1.9.5 DOCUMENTATION/REPORTING

The contractor shall provide all information and reports required by the Regulations, or directives issues pursuant thereto, and shall permit access to its books, records, accounts, other sources of information, and its facilities as may be determined by the appropriate federal agency to be pertinent to ascertain compliance with such Regulations or directives. Where any information required of a contractor is in the exclusive possession of another who fails or refuses to furnish this information, the contractor shall so certify to the appropriate State or Federal Agency, as appropriate, and shall set forth what efforts it has made to obtain the information.

1.9.6 NON – COMPLIANCE

Contractors, sub-contractors, and other associated entities failing to comply with the federal regulations legally required under contracts associated with Environmental Protection Agency (EPA), Housing and Urban Development (HUD), Department of Justice (DOJ), Department Of Transportation (DOT), or Department of Homeland Security (DHS) that have been granted to the City of Muskegon, may result in delayed closings, withholding the release of funds, or commitment cancellation.

1.10 BID TABULATION SPREADSHEETS

The Bid Tabulation spreadsheet(s) in these contract documents were created in Excel. Any Contractor who would like to use this spreadsheet in preparing a bid may obtain an electronic copy from the Engineering Office by calling the Engineering Department at (231)-724-6707.

1.10 BID TABULATION

City of Muskegon
Engineering Department

Project Engineer:	JB	Date:	3/18/2021
Project Number:	H92037/H92046		
Project description:	Monroe Street & Alley Improments		
Engineer's Estimate:	$ 271,750.00		

H 92037 Monroe, Third to Fourth _____

H 92046 Alley Improvements _____

BID TOTAL:

1.10 BID TABULATION

City of Muskegon
Engineering Department

Project Engineer: KP
Date: 3/11/2021
Project Number: H92037
Project description: Monroe, Third to Fourth
Engineer's Estimate: $ 166,460.00

Line Item	Pay Code	Description	Units	Quantity	Unit Price	Total
1	1500001	Mobilization, Max	LSUM	1		
2	2040055	Sidewalk, Rem	Syd	184		
3	2047011	Pavt, Rem, Modified	Syd	1267		
4	2057002	Machine Grading, Modified	Sta	4.2		
5	2080020	Erosion Control, Inlet Protection, Fabric Drop	Ea	4		
6	2090001	Project Cleanup	LSUM	1		
7	3020020	Aggregate Base, 8 inch	Syd	1127		
8	3060021	Maintenance Gravel, LM	Cyd	5		
9	5010025	Hand Patching	Ton	2		
10	5010051	HMA, 4E3	Ton	284		
11	8010007	Driveway, Nonreinf Conc, 8 inch	Syd	98		
12	8020038	Curb and Gutter, Conc, Det F4	Ft	696		
13	8030044	Sidewalk, Conc, 4 inch	Sft	434		
14	8030046	Sidewalk, Conc, 6 inch	Sft	296		
15	8120022	Barricade, Type III, High Intensity, Lighted, Furn	Ea	4		
16	8120023	Barricade, Type III, High Intensity, Lighted, Oper	Ea	4		
17	8120170	Minor Traf Devices	LSUM	1		
18	8120250	Plastic Drum, High Intensity, Furn	Ea	25		
					PAGE 1 TOTAL	

City of Muskegon
Engineering Department

Project Engineer: KP
Date: 3/11/2021
Project Number: H92037
Project description: Monroe, Third to Fourth
Engineer's Estimate: $ 166,460.00

Line Item	Pay Code	Description	Units	Quantity	Unit Price	Total
19	8120251	Plastic Drum, High Intensity, Oper	Ea	25		
20	8120350	Sign, Type B, Temp, Prismatic, Furn	Sft	148		
21	8120351	Sign, Type B, Temp, Prismatic, Oper	Sft	148		
22	8120352	Sign, Type B, Temp, Prismatic, Spec, Furn	Sft	8		
23	8120353	Sign, Type B, Temp, Prismatic, Spec, Oper	Sft	8		
24	8160062	Topsoil Surface, Furn, 4 inch	Syd	854		
25	8167011	Hydroseeding	Syd	854		
26	8237001	Watermain, DI, 8 inch, Tr Det G, Modified	Ft	406		
27	8237001	Water Service, 1 inch, Copper Type k	Ft	527		
28	8237001	Water Service, Private Property, 1 inch	Ft	123		
29	8237050	Bend, 8 inch, 45 Degree, DI MJ	Ea	4		
30	8237050	Sleeve, 8 inch, Long, DI MJ	Ea	2		
31	8237050	Corporation Stop, 1 inch	Ea	15		
32	8237050	Curb Stop and Box, 1 inch	Ea	15		
33	8237050	Cut and Cap, 6 inch Watermain	Ea	2		
34	8237050	Water Service, Building Connection, 1 inch	Ea	5		
					PAGE 2 TOTAL	

H 92037 MONROE	**TOTAL:**

1.10 BID TABULATION

City of Muskegon
Engineering Department

Project Engineer: JB
Date: 3/11/2021
Project Number: H92046
Project description: Alley Improvements
Engineer's Estimate: $ 105,290.00

Line Item	Pay Code	Description	Units	Quantity	Unit Price	Total
1	1500001	Mobilization, Max	LSUM	1		
2	2030011	Dr Structure, Rem	Ea	8		
3	2030015	Sewer, Rem, Less than 24 inch	Ft	400		
4	2047011	Pavt, Rem, Modified	Syd	1000		
5	2057002	Machine Grading, Modified	Sta	4		
6	2080020	Erosion Control, Inlet Protection, Fabric Drop	Ea	4		
7	2090001	Project Cleanup	LSUM	1		
8	3020020	Aggregate Base, 8 inch	Syd	890		
9	4027001	Sewer, PVC SDR 35, 10 inch, Tr Det B	Ft	15		
10	4027001	Sewer, PVC SDR 35, 12 inch, Tr Det B	Ft	400		
11	4027050	Sewer WYE, PVC SDR 35, 12 INCH X 8 INCH	Ea	8		
12	4027050	Sewer Lateral, PVC SDR 35, 8 Inch, TR DET B, Modified	Ea	8		
13	4027050	Sewer Bulkhead, 12 Inch	Ea	2		
14	4030010	Dr Structure Cover, Type B	Ea	3		
15	4030025	Dr Structure Cover, Type D	Ea	3		
16	4030210	Dr Structure, 48 inch dia	Ea	6		
17	4030250	Dr Structure, Add Depth of 48 inch dia, 8 foot to 15 foot	Ft	7		
18	4037050	Dr Structure, Adj, Case 1, Modified	Ea	1		
					PAGE 1 TOTAL	

City of Muskegon
Engineering Department

Project Engineer: JB
Project Number: H92046
Project description: Alley Improvements
Engineer's Estimate: $ 105,290.00
Date: 3/11/2021

Line Item	Pay Code	Description	Units	Quantity	Unit Price	Total
19	5010025	Hand Patching	Ton	4		
20	5010051	HMA, 4E3	Ton	196		
21	8010007	Driveway, Nonreinf Conc, 8 inch	Syd	22		
22	8020038	Curb and Gutter, Conc, Det F4	Ft	75		
23	8030044	Sidewalk, Conc, 4 inch	Sft	155		
24	8030047	Sidewalk, Conc, 7 inch	Sft	200		
25	8120022	Barricade, Type III, High Intensity, Lighted, Furn	Ea	4		
26	8120023	Barricade, Type III, High Intensity, Lighted, Oper	Ea	4		
27	8120028	Plastic Drum with High Intensity Sheeting, Furnished	ea	20		
28	8120029	Plastic Drum with High Intensity Sheeting, Operated	ea	20		
29	8120170	Minor Traf Devices	LSUM	1		
30	8120350	Sign, Type B, Temp, Prismatic, Furn	Sft	116		
31	8120351	Sign, Type B, Temp, Prismatic, Oper	Sft	116		
32	8207051	Above Ground Video Survey	LSUM	1		
					PAGE 2 TOTAL	

H 92046 ALLEY	**TOTAL:**

PART 2 - AGREEMENT

2.0 AWARDEE CHECKLIST

THIS FORM IS A REFERENCE TOOL FOR AWARDEE CONTRACTORS

The following forms ***MUST*** be completed:

	Completed?	
	Yes	No
1. Agreement (three signed copies)		
2. Performance Bond (three signed copies)		
3. Labor & Materialman's Bond (three signed copies)		
4. Non-Collusion Affidavit of Sub-Contractor (if applicable)		
5. Letters of Recommendation (if applicable)		
6. Certificate of Insurance (see requirements in section 3.0.24)		

Actual Completion of All Required Forms is the **Sole Responsibility of the Bidder**

IMPORTANT: Please return three (3) original signed copies of each signed form

2.1 DIRECTIONS FOR PREPARATION

1. Individual sureties, partnerships, or corporations not in the surety business will not be acceptable.

2. The name of the Principal shall be shown exactly as it appears in the Contract.

3. The penal sum shall not be less than that required by the Specifications.

4. If the Principals are partners, or joint ventures, each member shall execute the bond as an individual, with his/her place of residence shown.

5. If the Principal is a corporation, the bond shall be executed under its corporate seal. If the corporation has no corporate seal, the fact shall be stated, in which case a scroll or adhesive seal shall be affixed following the corporate name.

6. The official character and authority of the person(s) executing the bond for the Principal, if a corporation, shall be certified by the Secretary or Assistant Secretary thereof under the corporate seal; OR
   There may be attached copies of such corporation records as will evidence the official character and authority of the officer signing, duly certified by the Secretary or Assistant Secretary of the corporation, under the corporate seal, to be true copies.

7. The current Power-of-Attorney of the person signing for the surety company must be attached to the bond.

8. The date of the bond MUST NOT BE PRIOR TO THE DATE OF THE CONTRACT.

9. The following information must be placed on the bond by the surety company:

   a. The rate of premium in dollars per thousand; and
   b. The total dollar amount of the premium charged.

10. The signature of a witness shall appear in the appropriate place, attesting to the signature of each party to the bond.

11. Type or print the name underneath EACH SIGNATURE appearing on the bond.

12. An executed copy of the bond must be attached to each copy of the Contract (original counterpart) intended for signing.

2.2 AGREEMENT

THIS AGREEMENT, made this _____ day of _____, 20_____* by the City of Muskegon

And between _____

{a corporation organized and existing under the laws of the state of MICHIGAN];

or [a partnership consisting of_____];

or [an individual trading as _____];

Hereinafter called the "Contractor", and the CITY OF MUSKEGON, MICHIGAN:

WITNESSETH, that the Contractor and the City of Muskegon, for the consideration stated herein, mutually agree as follows:

ARTICLE 1. Statement of Work. The Contractor shall furnish all supervision, technical personnel, labor, materials, machinery, tools, equipment, and services, including utility and transportation services, and perform and complete all work required for the construction of the improvements embraced in this Contract, NAMELY:

H92037 & H92046
Construction includes 800 feet of pavement removal and replacement, 400 feet of water main replacement, 400 feet of storm sewer replacement, concrete curb and gutter replacement and various other concrete items in the City of Muskegon, Muskegon County.

and required supplemental work for the completion of this Project, all in strict accordance with the Contract, including all Addenda.

ARTICLE 2. The Contract Price. The City of Muskegon will pay the Contractor for the performance of this Contract and the completion of the work covered therein an amount in current funds not to exceed $_____.

ARTICLE 3. Contract. The executed contract shall consist of, but not be limited to, the following:

Invitation for Bids
Part 1- Bids
Section 1 – Instruction to Bidders
Section 2 – Bid Proposal
Part 2 – Agreement
Part 3 – General Specifications
Section 1 – Project Performance
Section 2 – Affirmative Action
Section 3 – Labor Standards/EEOC/Anti-Kickback Act
Part 4 – Engineering Specifications
Part 5 – Project Special Specifications
Part 6 – MDOT Specifications
Part 7 – Appendices

This Agreement, together with other documents enumerated in this Article 3, which said other documents are as fully part of the Contract as if attached hereto or repeated herein, form the Contract between the parties hereto.
In the event any provision in any component part of this Contract conflicts with any provision of any other component part, the Contractor shall contact the City immediately in writing for a determination, interpretation and/or clarification of conflicting parts and priority of same. Said determination from the City shall be in writing and shall become an Addendum to this Contract

**Date contract awarded by the City Commission*

IN WITNESS WHEREOF, the parties hereto have caused this AGREEMENT to be executed in

SIGNED, SEALED AND DELIVERED IN THREE (3) ORIGINAL COUNTERPARTS

ATTEST:

_____
Signature

CONTRACTOR

_____
Signature

_____
Printed Name and Title

ATTEST:

_____
Signature

CITY OF MUSKEGON

_____
Mayor Signature

_____
City Clerk Signature

(SEAL)

CERTIFICATION (if applicable)

I, _____, certify that I am the _____ of the Corporation named as the Contractor herein;

That _____, who signed this Agreement on behalf of the Contractor, was then _____ of said Corporation;

That said Agreement was duly signed for and in behalf of said Corporation by authority of its governing body, and is within the scope of its corporate powers.

_____
Signature

(CORPORATE SEAL)

_____
Printed Name and Title

2.3 PERFORMANCE BOND

KNOW ALL MEN BY THESE PRESENTS, that we, _____

_____

as Principal, and _____,

as Surety, are held and firmly bound unto the City of Muskegon, its certain attorney, successors or assigns (hereinafter called the Obligee), in the full and just sum of _____

_____ dollars ($) lawful money of the United States, for the payment of which sum well and truly to be made, we bind ourselves, our heirs, administrators, executors, successors and assigns, jointly and severally, firmly by these presents:

WHEREAS, said Principal has entered into a certain contract with Obligee,

Dated_____, 20____, (hereinafter called the Contract) for:_____

_____

and the specifications for said work shall be deemed a part hereof as fully as if set out herein:

NOW, THEREFORE, THE CONDITIONS OF THIS OBLIGATION ARE SUCH THAT:

(a) If the Principal shall faithfully perform the Contract on his/her part, as of the time and in the manner therein provided; shall satisfy all claims and demands incurred in or for the same, or growing out of the same, or for injury or damages to persons or property in the performance thereof; shall fully indemnify and save harmless said Obligee from any and all cost and damage which the Obligee may suffer by reason of the Principal's failure to do so; and shall fully reimburse and par the Obligee any and all outlay and expense which it may occur by reason of such default; and

(b) If, after completion and acceptance of the work by the Obligee, the Principal shall promptly remedy any defects in the work due to faulty materials or workmanship which shall appear within the period of one year from the date of completion and final acceptance of the work, and pay for any damage to said Obligee, to the State of Michigan, or to any municipal subdivision or local authority thereof to which the rights and privileges of said Obligee have passed or been assigned, then this obligation shall be null and void; otherwise it shall remain in full force and virtue.

The said Surety, for value received, hereby stipulates and agrees that no change, extension of time, alteration or addition to the terms of the Contract to the work to be performed thereunder, or to the specifications accompanying the same, shall in any wise affect its obligations on this Bond; and it does thereby waive notice of any such change, extension of time, alteration or addition to the terms of the Contract, or to the work or specifications.

It is hereby further stipulated and agreed that, if the Principal is a non-Michigan Corporation, neither the Principal nor the Surety shall be discharged from liability on this Bond, nor the bond surrendered, until such Principal files with the Obligee a certificate from the Michigan Department of Revenue evidencing the payment in full of all taxes, penalties and/or interest, and a certificate from the Unemployment Compensation Commission evidencing the payment of all unemployment compensation contributions, penalties and/or interest, due the State of Michigan from said Principal, or any non-Michigan corporation, subcontractor thereunder, or for which liability has accrued but the time for payment has not arrived.

SIGNED, SEALED AND DELIVERED IN THREE (3) ORIGINAL COUNTERPARTS

THIS _____DAY OF _____, 20 _____.

Individual Principals Sign Here: In the Presence of:

_____ (SEAL) _____

_____ (SEAL) _____

_____ (SEAL) _____

Corporate Principals Sign Here: Attest:

_____ _____

_____ _____

(Printed Name and Title) (Printed Name)

Surety Sign Here: Attest:

_____ _____

_____ _____

(Printed Name and Title) (Printed Name)

SEAL

The rate of premium charge is $_____ per thousand.

The total amount of premium charged is $_____

(to be filled in by the Corporate Surety)

2.4 LABOR & MATERIALMAN'S BOND

KNOW ALL MEN BY THESE PRESENTS, that we, _____

_____

as Principal, and _____,

as Surety, are held and firmly bound unto the City of Muskegon, its certain attorney, successors or assigns (hereinafter called the Obligee) in the penal sum of _____ _____ dollars ($) lawful money of the United States, for the payment of which sum well and truly to be made, we bind ourselves, our heirs, personal representatives, successors and assigns, jointly and severally, firmly by these presents:

WHEREAS, said Principal has entered into a certain contract with said Obligee, dated_____, 20____, (hereinafter called the Contract) for:_____

_____

and the specifications for said work shall be deemed a part hereof as fully as if set out herein:

NOW, THEREFORE, THE CONDITION OF THIS OBLIGATION IS SUCH that, if said Principal, all subcontractors to whom any portion of the work provided for in said Contract is sublet, and all assignees of said Principal and of such subcontractors, shall promptly make payment for all material furnished, labor supplied or performed, rental for equipment employed and services rendered by public utilities in or in connection with the prosecution of the work, whether or not said material, labor, equipment or services entered into become component parts of the work or improvement contemplated in said Contract, in any amendment, extension of, or addition to said Contract, then the above obligation shall be void; otherwise, it shall remain in full force and effect; PROVIDED, HOWEVER, that this Bond is subject to the following conditions and limitations:

(a) All persons who have performed labor, rendered services or furnished materials or equipment, shall have a direct right of action against the Principal and Surety on this Bond, which right of action shall be asserted in proceedings instituted in the State in which such labor was performed, services rendered or materials furnished (or where labor has been performed, services rendered or materials furnished under said Contract in more than one state, then in any such states). Insofar as permitted by the laws of such State, such right of action shall be asserted in a proceeding instituted in the name of the Obligee to the use and benefit of the persons instituting such action and any or all other persons having claims hereunder; and any other person having a claim hereunder shall have the right to be made a party to such proceedings, but not later than one year after the complete performance of said Contract and final settlement thereof, and to have such claim adjudicated in such action and judgment rendered thereon; PROVIDED HOWEVER, that the Obligee shall not be liable for the payment of any costs or expenses of any such suit.

(b) The Surety shall not be liable hereunder for any damages or compensation recoverable under any workmen's compensation or employer's liability statute.

(c) In no event shall the Surety be liable for a greater sum than the penalty of this Bond, or subject to any suit, action or proceeding thereon, that is instituted later than one year after the complete performance of said Contract and final settlement thereof.

(d) As used herein: The term "Person" refers to any individual, firm or corporation which has furnished materials, equipment or public utility services to be used on or incorporated in the work, or the prosecution thereof, provided for in said Contract or any amendment, extension of, or addition to said Contract; and/or to any person engaged in the prosecution of the work provided for in said

Contract or any, extensions of, or addition to said Contract, who is an agent, servant or employee of the Principal or of any subcontractor, or any assignee of said Principal or any subcontractor; and also anyone so engaged who performs the work of a laborer or mechanic, regardless of any contractual relationship between the Principal or any subcontractor, or any assignee of said Principal or subcontractor and such laborer or mechanic; BUT shall not include office employees not regularly stationed at the site of the work.

(e) It is hereby further stipulated and agreed that, if the Principal is a non-Michigan corporation, neither the Principal nor the Surety shall be discharged from liability on this Bond, nor the Bond surrendered, until such Principal files with the Obligee a certificate from the Michigan Department of Revenue evidencing the payment in full of all taxes, penalties and/or interest due the State of Michigan from the Principal, or any non-Michigan corporation, subcontractor thereunder, or for which liability has accrued but the time for payment has not arrived.

The Surety, for value received, hereby stipulates and agrees that no change, extension of time, alteration or addition to the terms of the Contract, to the work to be performed thereunder, or to the specifications accompanying the same, shall in any wise affect the obligations of this Bond, and it does hereby waive notice of any such change, extension of time, alteration or addition to the terms of the Contract, the work thereunder, or the specifications.

SIGNED, SEALED AND DELIVERED IN THREE (3) ORIGINAL COUNTERPARTS

THIS _____DAY OF _____, 20 _____.

Individual Principals Sign Here:	In the Presence of:
_____	_____
_____ (Printed Name and Address)	
_____	_____
_____ (Printed Name and Address)	
_____	_____
_____ (Printed Name and Address)	

Corporate Principals Sign Here:	Attest:
_____	_____
_____ (Printed Name and Title)	_____ (Printed Name)

Surety Sign Here:	Attest:
_____	_____
_____ (Printed Name and Title)	_____ (Printed Name)

SEAL

2.5 NON-COLLUSION AFFIDAVIT OF SUBCONTRACTOR

State of _____)
) ss.
County of _____)

_____ , being first duly sworn, deposes and says that:

1. He/She is _____
(owner, partner, officer, representative, agent)

   of _____ , the Bidder that has submitted the attached Bid to the City of Muskegon;

2. He/She is fully informed respecting the preparation and contents of the attached Bid and of all pertinent circumstances thereto;

3. Such Bid is genuine and is not a collusive or sham Bid;

4. Neither said Bidder nor any of his/her officers, partners, owners, agents, representatives, employees or parties in interest, including this affiant, has in any way colluded, conspired, connived or agreed, directly or indirectly, with any other Bidder, firm or person to submit a collusive or sham Bid in connection with the Contract for which the attached Bid has been submitted, or to refrain from bidding in connection with such Contract; nor has in any manner, directly or indirectly, sought by agreement, collusion, communication or conference with any other Bidder, firm or person to fix the price or prices in the attached Bid or any other bid; nor to fix any overhead, profit or cost element of the Bid price or the bid price of any other bidder; nor to secure through any collusion, conspiracy, connivance or unlawful agreement any advantage against the City of Muskegon or any person interested in the proposed Contract; and

5. The price or prices quoted in the attached Bid are fair and proper, and are not tainted by any collusion, conspiracy, connivance or unlawful agreement on the part of the Bidder or any part of its agents, representatives, owners, employees or parties in interest, including this affiant.

_____
Signature

_____
Printed Name and Title

Subscribed and sworn to before me

This _____day of _____, 20_____

_____

_____
Title

SEAL

2.6 LETTERS OF RECOMMENDATION IN LIEU OF PERFORMANCE BOND

In accordance with Section 1, four letters of sincere recommendation may be presented to the City Manager in lieu of a performance bond when this Contract is under the amount of $50,000 and the successful Bidder cannot produce the appropriate performance bond.

To use letters of recommendation for this purpose, your intention to do so must be disclosed as part of your bid, so that a decision on acceptability can be made prior to the contract award.

The four letters are to be presented prior to the execution of the Contract Agreement and must be accompanied by the Statement of Bidder's Qualifications as outlined (Part 1, Section 2, Bid Proposal). Each of the four letters should contain no less than the following information:

THE LETTER OF RECOMMENDATION PACKAGE IS SUBJECT TO CITY MANAGER AND/OR CITY COMMISSION APPROVAL PRIOR TO LETTING THE BID OR EXECUTING THE AGREEMENT.

SUMMARY OF INFORMATION TO BE INCLUDED IN EACH LETTER OF RECOMMENDATION

1. On letterhead of the recommending company, including name, address and phone number of the recommending company.

2. Include reference to the name of the company being recommended.

3. Include a brief description of the type of each of the projects the recommended company performed, the total dollars contracted for each, and the date of construction start and completion under each contract.

4. Include a statement indicating how the company being recommended performed the work involved under the contracts, whether the recommended company accomplished the work satisfactorily and within the appropriate time limits of the contracts.

5. Indicate if there was any default on the part of or litigation as a result of the recommended company.

6. Indicate if, to the best of knowledge, all subcontractors and/or suppliers of labor or materials on each project were properly compensated by the company being recommended.

7. Include a statement the same as, or similar to the following:

   "I, on behalf of my organization (or company by name) recommend this company (or the name of the company being recommended) as responsible and competent, and I believe they can capably perform construction work similar to that described in this letter in a timely and satisfactory manner."

PART 3 – GENERAL SPECIFICATIONS

SECTION 1

GENERAL SPECIFICATIONS
3.0 FOR PROJECT PERFORMANCE

3.0.1 ASSIGNMENT OR NOVATION

a. The Contractor shall not assign or transfer, whether by an assignment or novation, any of its rights, duties, benefits, obligations, liabilities or responsibilities under this Contract without the written consent of the City of Muskegon; provided, however, that assignments to banks, trust companies or other financial institutions may be made without said consent.
b. No assignment or novation of this Contract shall be valid unless it expressly provides that the assignment of any of the Contractor's rights or benefits under the Contract is subject to a prior lien for labor performed, services rendered, and materials, tools and equipment supplied for the performance of the work under this Contract in favor of all persons, firms or corporations rendering such labor or services, or supplying such materials, tools or equipment.

3.0.2 CONFLICT OF INTEREST

a. No official of the City of Muskegon who is authorized in such capacity and on behalf of the City to negotiate, make, accept or approve, or to take part in negotiating, making, accepting or approving, any engineering, inspection, construction or material supply contract, or any subcontract, in connection with the construction of this Project shall become directly or indirectly interested personally in this Contract or in any part hereof.
b. No officer, employee, architect, attorney, engineer or inspector of or for the City who is authorized in such capacity, and on behalf of the City, to exercise any legislative, executive, supervisory or other similar function in connection with the construction of this Project, shall become directly or indirectly interested personally in this Contract or in any part hereof, any material supply contract, any subcontract, any insurance contract, or any other contract pertaining to this Project.

3.0.3 CITY'S AUTHORITY

a. The City of Muskegon shall designate and identify its Authorized Representative(s) and Inspectors.
b. The Authorized Representative will be responsible for the execution of the work under this Contract. The Authorized Representative will determine the amount, quality, acceptability of materials, and fitness of the work to be paid for under this Contract. That Representative will decide all questions which may arise in relation to said work and the construction thereof. The City's estimates and decisions shall be final and conclusive, except as herein otherwise expressly provided.
c. Inspectors will work under the direct supervision of the Authorized Representative. Inspectors will not be authorized to revoke, alter, enlarge or relax any of these specifications nor to change the plans in any particular. The Inspector on the work will inform the Authorized Representative as to the progress of the work, the manner in which it is being done, and the quality of the materials being used. He/She will also call to the attention of the Contractor any failure to follow the plans and specifications that may be observed. He/She shall have the authority to prevent any material from being used, and to stop any work from being done, which he/she believes does not conform to the plans and specifications, until the Authorized Representative has an opportunity to inspect the material or work. In no instance shall any action or omission on the part of the Inspector relieve the Contractor of the responsibility of completing the work in accordance with the plans and specifications.
d. In case any question shall arise between the parties hereto relative to said Contract, the determination or decision of the City shall be a condition precedent to the right of the Contractor to receive any money or payment for work under this Contract affected in any manner, or to any extent, by such question.
e. The City shall decide the meaning and intent of any portion of this Contract or any specifications therein where the same may be found obscure or in dispute. Any differences or conflicts in regard to the work which may arise between the Contractor under this Contract and other contractors performing work for the City shall be adjusted and determined by the City.

3.0.4 OTHER CONTRACTS - The City may award, or may have awarded, other contracts for additional work in the vicinity of this Project; and the Contractor shall cooperate fully with such other contractors by scheduling his/her own work with that to be performed under other contracts as may be directed by the City. The Contractor shall not commit or permit any act which will interfere with the performance of work by any other contractor as scheduled.

3.0.5 TERMINATION OF CONTRACT

a. If the Contractor refuses or fails to prosecute the work with such diligence as will ensure its completion within the time specified, or as amended, in these Contract Documents, the City may, by written notice, terminate the Contractor's right to proceed with the work.
b. Upon such termination, the City of Muskegon may take over the work and prosecute same to completion, by contract or otherwise, and may take possession of, and utilize in completing the work, such materials, tools, equipment and plant as may be on the site of the work and necessary to the completion thereof.
c. The Contractor and the sureties to the Contract shall be liable to the City for any additional cost incurred by the City in its completion of the work, and shall further be liable for the liquidated damages for any delay in completion of work as provided by this Contract.

3.0.6 REVIEW BY AUTHORIZED REPRESENTATIVES - The City of Muskegon, its authorized representative(s) and/or agents shall at all times have access to, and be permitted to observe and review, all work, materials, equipment, payrolls, personnel records, employment conditions, material invoices, and other relevant data and records pertaining to this Contract, however, that all instructions and approval with respect to the work will be given to the Contractor by the City of Muskegon through its Authorized Representative.

3.0.7 GENERAL GUARANTY

a. Final acceptance of the work will be acknowledged in writing to the Contractor by the City of Muskegon. Neither the final certificate of payment, any provision in the Contract, nor partial or entire use of the improvements embraced in this Contract by the City or the public shall constitute an acceptance of work not done in accordance with the Contract; nor shall such certificate, provision or use relieve the Contractor of liability in respect to any express warranties or responsibilities for faulty materials or workmanship.
b. The period of guarantee shall not begin until the date of final written acceptance by the City of all work required. The Contractor shall promptly remedy any defects in the work and pay for the damage to other work resulting therefrom which shall appear within a period of twelve (12) months from the date of final acceptance of the work.

3.0.8 WARRANTY OF TITLE

a. No material, supplies or equipment for the work shall be purchased subject to any chattel mortgage or under conditional sale or other agreement by which an interest therein, or in any part thereof, is retained by the seller or supplier.
b. The Contractor shall warrant good title to all materials, supplies and equipment installed or incorporated in the work and, upon completion of all work, shall deliver the same, together with all improvements and appurtenances constructed or placed thereon by him/her, to the City of Muskegon free from any claims, liens or charges.
c. Neither the Contractor nor any person, firm or corporation furnishing any material and/or labor for any work covered by this Contract shall have any right to a lien upon any improvement or appurtenance thereon.
d. Nothing contained in this paragraph, however, shall impair:
    i. The right of persons furnishing materials or labor to recover funds owed them under any bond given by the Contractor for their protection;
    ii. Any rights under any law permitting such persons to look to funds due the Contractor yet in the hands of the City.
e. The provisions of this Subsection 5 shall be inserted in all Subcontracts and material contracts; and notice of its provisions shall be given to all persons furnishing materials for the Project when no formal contract is entered into for such materials.

3.0.9 PATENTS - The Contractor shall hold and save the City of Muskegon, its officers and employees, harmless from liability of any nature or kind, including costs and expenses, for or on account of any patented or unpatented invention, process article, or appliance manufactured or used in the performance of the Contract, including its use by the City of Muskegon.

3.0.10 PAYROLLS AND BASIC RECORDS

a. The Contractor will submit weekly a copy of all payrolls, basic records relating thereto, and completed forms as requested, to the City's Affirmative Action Department accompanied by a "Weekly Statement of Compliance". The prime Contractor shall be responsible for the submission of copies of payrolls of all Subcontractors. *
b. The Contractor shall submit to the City such schedule of quantities and costs, progress schedules, payrolls, reports, estimates, records and other data as the City may request from time to time concerning the work performed under this Contract.
c. The Contractor shall withhold Muskegon City Income Taxes from each and every employee who is subject to same, and shall pay Contractor's Income Tax due, if any. Contractor shall further require the same of each Subcontractor, consultant or other pay with whom the contractor works or from whom contractor obtains goods or services for the project. Payroll submissions required by this agreement shall include full information showing said withholding. The City may withhold payments otherwise due to the contractor to assure compliance with this agreement or cure noncompliance.

3.0.11 SIGNS AS REQUIRED

a. The signs that may be required for this project by the Department of HUD, the National Historic Preservation organizations, or other pertinent funding agencies which may require significant posting on the job site, will be provided and erected by the Contractor as incidental to the Contract.
b. The Contractor shall maintain these signs in good condition throughout the life of this contract.

3.0.12 NATIONAL HISTORIC PRESERVATION ACT OF 1966 - The Contractor agrees to contribute to the preservation and enhancement of structures and objects of historical, architectural or archaeological significance when such items are found and/or unearthed during the course of the project, and to consult with the State Historic Preservation Officer for recovery of the items: [Reference: National Historic Preservation Act of 1966 (80 Stat 915, 16 USC 470) and Executive Order No. 11593 of May 31, 1971] AND to assure Subcontractor's compliance as well.

3.0.13 CLEAN AIR ACT - The Contractor shall comply and shall require each of its Subcontractors employed in the completion of this project to comply with all applicable provisions of the Clean Air Act as amended by Public Law 91-604.*

3.0.14 SOIL EROSION AND SEDIMENT CONTROL ACTS

a. Public Acts 346 and 347 as amended shall be observed and enforced while working under these documents. Necessary permits for both Acts shall be obtained by the City of Muskegon. Enforcement for Act 346 shall be by the Michigan Department of Natural Resources, and the enforcing agent for Act 347 shall be the City of Muskegon.
b. The Contractor shall conduct his/her work in such a manner that soil, fuels, oil, bituminous materials, chemicals, sanitary sewage and other harmful materials resulting from the execution of this project are confined within project limits and prevented from entering watercourses, rivers, lakes or reservoirs. All applicable regulations of fish and wildlife agencies and statutes relating to the prevention and abatement of pollution shall be complied with during the performance of this contract. Operations shall be conducted in such a manner as to reduce erosion to the practicable minimum to prevent damaging sedimentation of watercourses, streams or lakes.*
c. The Contractor shall be responsible for utilizing various measures of control in his/her own work and that of Subcontractors to prevent erosion and sediment damage. When applicable, these measures and requirements will be identified and provided on the plans or in the Special Specifications. They are, however, not to be considered all-inclusive, as additional protective measures may be required as the work progresses. No payment will be allowed for this work.

3.0.15 SOIL REMOVAL AND DUMPING ORDINANCE - Under City ordinance, a permit must be obtained from, and a $150 fee paid to, the City of Muskegon Building Inspection Department IF excavated or excess soil materials become the property of the Contractor AND those materials are to be deposited as fill within the corporate limits of the City of Muskegon; OTHERWISE, no permit will be required of the Contractor while working on the Project covered by this Contract.

3.0.16 PERMITS AND CODES

a. The Contractor shall give all notices required by and comply with all applicable laws, ordinances and codes of the local government. All construction work and/or utility installations shall comply with all applicable ordinances and codes including all written waivers. Before installing any work, the Contractor shall examine the drawings and the Specifications for compliance with applicable ordinances and codes, and shall immediately report any discrepancy to the City.
b. Where the requirements of the drawings and Specifications fail to comply with such applicable ordinances and codes, the City will adjust the Contract by Change Order to conform to such ordinances or codes (unless waivers in writing covering the difference have been granted by the governing body or department) and make appropriate adjustment in the Contract Price or stipulated Unit Prices.
c. Should the Contractor fail to observe the foregoing provisions and proceed with the construction and/or install any utility at variance with any applicable ordinance or code, including any written waivers (notwithstanding the fact that such installation is in compliance with drawings, Technical or Special Specifications), the Contractor shall remove such work without cost to the City, but a Change Order may be issued to cover only the excess cost the Contractor would have been entitled to receive if the change had been made before he/she commenced work on the items involved.
d. The Contractor shall at his/her own expense secure and pay for all necessary permits to execute the work from each involved governmental unit, whether it be the City of Muskegon, townships, County or State of Michigan. In some cases, certain permits will be obtained by the owner and will be so identified within the Special Specifications. All other permits are the responsibility of the Contractor.
e. The Contractor shall comply with applicable local and state laws and ordinances governing the disposal of surplus excavation materials, debris and rubbish on or off the Project Site and commit to trespass on any public or private property in any operation due to or connected with the improvements embraced in this Contract.

3.0.17 TRAFFIC CONTROL - The Contractor shall at all time so conduct his/her work as to ensure the least possible obstruction to traffic. The safety and convenience of the general public and the residents in or adjacent to the Project Site and the protection of persons and property shall be provided for by the Contractor. The Contractor shall provide and maintain adequate barricades, signs, lights and flags to warn and guide the public, and shall provide flagmen and watchmen when needed or when so ordered by the City in full accordance with the MICHIGAN MANUAL OF UNIFORM TRAFFIC ONTROL DEVICES, published and revised from time to time by the Michigan Department of Transportation. The Contractor shall be responsible for compliance with this Item by all Subcontractors as well.*

3.0.18 REQUIRED PROVISIONS DEEMED INSERTED - Each and every provision of law and clause required by law to be inserted in this Contract shall be deemed to be inserted herein, and the Contract shall be read and enforced as though it were included herein; and, if through error or otherwise, any such provision is not inserted, or is incorrectly inserted, then upon the application of either party to this Contract, the Contract shall forthwith be physically amended to make such insertion or correction. This clause shall be included in all Subcontracts.*

3.0.19 COMMUNICATIONS

a. All notices, demands, requests, instructions, approvals, proposals and claims must be in writing.
b. Any notice to or demand upon the Contractor from the City relative to any part of this Contract shall be sufficiently considered given, and the service thereof completed, when said notice is posted, by certified or registered mail, to the Contractor at his/her last given address; or when said notice is delivered in person to the Contractor or authorized representative on the Project Site, at the office

of the Contractor, or to any telegraph company for transmission with charges prepaid, in each case addressed to such office.

c. All papers required to be delivered to the City of Muskegon shall be delivered to the Muskegon City Hall, to the attention of the Authorized Representative on this Project, and any notice to or demand upon the City shall be sufficiently given if so delivered, or if posted, by certified or registered mail, to 933 Terrace Street, Muskegon, Michigan 49443, or to any telegraph company for transmission with charges prepaid, in each case to the same address. Any such notice shall be deemed to have been given as of the time of the actual delivery or at the time of actual receipt, as the case may be.

3.0.20 REQUEST FOR SUPPLEMENTARY INFORMATION - It shall be the responsibility of the Contractor to make timely requests of the City for any additional information not already in his/her possession which should be furnished by the City under the terms of this Contract, and which he/she will require in the planning and execution of the work. Such requests may be submitted from time to time as the need arises, but each shall be filed in ample time to permit appropriate action to be taken by all parties involved so as to avoid delay. Each request shall be in writing, listing the various items and the latest date by which each will be required by the Contractor. The first list shall be submitted within two (2) weeks after the Contract award, and shall be as complete as possible at that time. The Contractor shall, upon request, furnish promptly any assistance and information the City may require in responding to these requests. The Contractor shall be fully responsible for any delay in his/her work or to others arising from his/her failure to comply fully with the provision of this Article.

3.0.21 PROGRESS SCHEDULE AND NOTIFICATION REQUIREMENTS

a. Immediately after execution of the Agreement, the Contractor shall submit for approval a carefully prepared Progress Schedule showing the proposed dates of starting and completing each of the various sections of work. The work which the Contractor is required to perform under this Contract shall commence at the time stipulated by the City in its Notice to Proceed and shall be fully completed by the dates indicated in the Contract Agreement.
b. The Contractor shall notify the City's Authorized Representative as to the exact time at which he/she proposes to begin any part of the work at least 48 hours in advance of any such start so that line and grade can be established and inspections provided.
c. When work is to be done by City forces, in coordination with City forces, or if City of Muskegon utilities need to be located and/or marked, the Contractor shall provide at least 48 hours' advance notice to the City Department from which the work is requested.
d. The Contractor shall notify "Miss Dig" 48 hours in advance of any work start to allow sufficient time for utility identification and location. The City of Muskegon is NOT a part of the "Miss Dig" program.
e. Before permission can be granted by the Authorized Representative for street closures, it shall be the Contractor's responsibility to notify the police and fire departments and the Department of Public Works and Utilities.

3.0.22 PAYMENTS BY THE CONTRACTOR

a. The Contractor shall provide and pay for all materials, labor, tools, equipment, water, lights, heat, power, transportation, superintendence, temporary construction of every nature, charges, levies, fees or other expenses, and all other services and facilities of every nature necessary for the performance of this Contract and delivery of all improvements embraced therein within the specified time.
b. The Contractor shall pay for all transportation and utility services not later than the 20th day of the calendar month following that in which services are rendered.
c. The Contractor shall pay for all materials, tools, and other expendable equipment to the extent of 90% of the cost thereof, not later than the 20th day of the calendar month following that in which such materials, tools and equipment are delivered at the Project Site, and the balance of cost thereof not later than the 30th day following the completion of that part of the work in or on which such materials, tools and equipment are incorporated or used.
d. The Contractor shall pay to each of his/her Subcontractors, not later than the 5th day following each payment to the Contractor, the respective amounts allowed him/her on account of the work performed by the Subcontractors to the extent of each Subcontractor's interest therein.

3.0.23 SUBCONTRACTS

a. The Contractor shall not execute an agreement with any Subcontractor or permit any subcontractor to perform any work included in this Contract until he/she has submitted a non-collusive affidavit from the subcontractor and received written approval of such subcontractor from the City of Muskegon.
b. The Contractor shall be as fully responsible to the City of Muskegon for the acts and omissions of his/her Subcontractors, and of persons either directly or indirectly employed by them, as he/she is for the acts and omissions of persons directly employed by the Contractor.
c. The Contractor shall cause appropriate provisions to be inserted in all Sub-contracts relative to compliance by each Sub- contractor with the provisions of this Contract.
d. No proposed Subcontractor shall be disapproved by the City of Muskegon except for cause. Nothing contained in this Contract shall create any contractual relation between any Subcontractor and the City of Muskegon.

3.0.24 INSURANCE AND INDEMNITY

a. Hold Harmless Agreements. To the fullest extent permitted by law, Contractor and Subcontractors agree to defend, pay in behalf of, indemnify, and hold harmless the CITY OF MUSKEGON, all elected and appointed officials, all employees and volunteers, all boards, commissions, and/or authorities and board members, including employees and volunteers thereof working on behalf of the CITY OF MUSKEGON against any and all claims, demands, suits, or loss, including all costs connected therewith, and for any damages which may be asserted, claimed or recovered against or from the CITY OF MUSKEGON and their elected and appointed officials, employees, volunteers, or others working on behalf of the CITY OF MUSKEGON by reason of personal injury, including bodily injury and death, property damage, including loss of use thereof, and/or the effects of or release of toxic and/or hazardous material which arises out of or is any way connected or associated with this contract. The obligation to defend and hold harmless extends to Contractor's employees, agents, subcontractors, assigns and successors.
b. The contractor, or any of their subcontractors, shall not commence work under this contract until they have obtained the insurance required under this paragraph, and shall keep such insurance in force during the entire life of this contract. All coverage shall be with insurance companies licensed and admitted to do business in the State of Michigan and acceptable to the CITY OF MUSKEGON. The requirements below should not be interpreted to limit the liability of the Contractor. All deductibles and SIR's are the responsibility of the Contractor.
c. The Contractor shall procure and maintain the following insurance coverage:
    i. Workers' Compensation Insurance- The Contractor and Subcontractor shall procure and maintain during the life of this contract, Workers' Compensation Insurance, including Employers Liability Coverage in accordance with all applicable Statutes of the State of Michigan.
    ii. Commercial General Liability Insurance - The Contractor shall procure and maintain during the life of this contract, Commercial General Liability Insurance on an "Occurrence Basis" with limits of liability not less than $1,000,000.00 per occurrence and aggregate combined. Coverage shall include the following extensions: (A) Contractual Liability; (B) Products and Completed Operations; (C) Independent Contractors Coverage; (D) Broad Form General Liability Extensions or equivalent, if not already included. Personal Injury, Bodily Injury and Property Damage coverage's shall be included (E) Deletion of all explosion, collapse and underground (SCU) exclusions, if applicable. The said insurance shall cover liability caused by the activities of any subcontractor.
    iii. Automotive Liability - The Contractor shall procure and maintain during the life of this contract Automotive Liability Insurance, including Michigan No-Fault Coverage's, with limits of liability for third party claims of not less than $1,000,000.00 per occurrence or combined single limit Bodily Injury and Property Damage. Coverage shall include all owned vehicles, all non-owned vehicles and all hired vehicles. The said insurance shall cover liability caused by the activities of any subcontractor.

iv. Additional Insured- Commercial General Liability and Automotive Liability Insurance, as described above, shall include an endorsement stating the following shall be "Additional Insureds" using the following language: "The CITY OF MUSKEGON and all elected and appointed officials, all employees and volunteers, all boards, commissions and/or authorities and board members, including employees and volunteers thereof. It is understood and agreed by naming The CITY OF MUSKEGON as additional insured, coverage afforded is considered to be primary and any other insurance The City of Muskegon may have in effect shall be considered secondary and/or excess.

v. Cancellation Notice- All policies as described above, shall include an endorsement stating that it is understood and agreed Thirty (30) days, Ten (10) days for non-payment of premium, Advance Written Notice of Cancellation, Non-Renewal, Reduction, and/or Material Change shall be sent to: CITY OF MUSKEGON ENGINEERING DEPARTMENT", PO Box 0536, Muskegon, MI 49443-0536

d. Owner's and Contractor's Protective Liability- The Contractor shall procure and maintain during the life of this contract Owner's and Contractor's Protective Liability with limits of liability not less than $1,000,000.00 per occurrence and/or aggregate, combined single limit. Personal injury, Bodily injury and Property Damage coverage's shall be included. The CITY OF MUSKEGON shall be "Named Insured" on this coverage. Thirty (30) day notice of cancellation to the CITY OF MUSKEGON shall be required. Said insurance shall cover liability caused by the activities of any subcontractor(s) either by means of a rider attached to the Prime Contractor's Certificate of Insurance indicating this coverage for subcontractors; or the subcontractor(s) shall submit their own Certificate of Insurance.

e. Proof of Insurance Coverage - The Contractor and Subcontractors shall provide the CITY OF MUSKEGON at the time the contracts are returned by him/her for execution, a Certificate of Insurance as well as the required endorsements. In lieu of required endorsements, if applicable, a copy of the policy sections where coverage is provided for additional insured and cancellation notice would be acceptable. Copies or certified copies of all policies mentioned above shall be furnished. Certificates and policies endorsing the City of Muskegon as additional insured as listed below:

i. Two (2) copies of Certificate of Insurance for

ii. Workers' Compensation Insurance;

iii. Two (2) copies of Certificate of Insurance for Commercial General Liability Insurance;

iv. Two (2) copies of Certificate of Insurance for Automotive Liability Insurance;

v. Original Policy, or original Binder pending issuance of policy, for Owner's and Contractor's Protective Liability Insurance;

vi. If so requested, Certified Copies of all policies mentioned above will be furnished.

f. If any of the above coverage's expires during the term of this contract, the Contractor and Subcontractors shall deliver renewal certificates and/or policies to CITY OF MUSKEGON at least ten (10) days prior to the expiration date.

3.0.25 MATERIALS AND WORKMANSHIP

a. Unless otherwise specifically provided for in the Technical or Special Specifications, all workmanship, equipment, materials and articles the work shall be new and the best grade of the respective kinds for the purpose. Where equipment, materials, articles or workmanship are referred to as "equal to" any particular standard, the City of Muskegon will decide the question of equality.

b. The City of Muskegon may require the Contractor to dismiss from this Project such employee(s) as the City of Muskegon may deem incompetent, careless, and/or insubordinate.

3.0.26 SUPERINTENDENCE BY CONTRACTOR

a. Except where the Contractor is an individual and gives his/her personal superintendence to the work, the Contractor shall provide a competent superintendent, satisfactory to the City of Muskegon, on the work at all times during working hours with full authority to act for the Contractor. The Contractor shall also provide adequate staff for the proper coordination and expediting of the work.

b. The Contractor shall lay out his/her own work, and shall be responsible for all work executed by him/her under this Contract. He/She shall verify all figures and elevations before proceeding with the work and will be held responsible for any error resulting from his/her failure to do so.

3.0.27 FITTING AND COORDINATION OF THE WORK - The Contractor shall be responsible for the proper fitting of all work, and for the coordination of the operations of all trades, subcontractors, or materialmen engaged upon this Contract. He/She shall be prepared to guarantee to each of his/her Subcontractors the locations and measurements which they may require for the fitting of their work to all surrounding work.

3.0.28 MUTUAL RESPONSIBILITY OF CONTRACTORS

a. If, through acts or neglect on the part of the Contractor, any other contractor or any subcontractor shall suffer loss or damage on the work, the Contractor shall settle with such other contractor or subcontractor by agreement or arbitration, if such other contractor or subcontractor will so settle.
b. If such other contractor or subcontractor shall assert any claim against the City of Muskegon on account of any damage alleged to have been so sustained, the City will notify the Contractor, who shall defend at his/her own expense any suit based upon such claim, and, if any judgment or claim against the City is allowed, the Contractor shall pay all costs and expenses in connection therewith.

3.0.29 CARE OF THE WORK

a. The Contractor shall be responsible for all damages to person or property that occur as a result of his/her fault or negligence in connection with the prosecution of the work and shall be responsible for the proper care and protection of all materials delivered and work performed until completion and final acceptance, whether or not the same has been covered in whole or part by payments made by the City.
b. The Contractor shall provide sufficient competent watchmen, both day and night, including Saturdays, Sundays and holidays, from the time the work commences until final completion and acceptance, as needed.
c. In an emergency affecting the safety of life, limb or property, including adjoining property, the Contractor, without special instructions or authorization from the City, is authorized to act at his/her own discretion to prevent such threatened loss or injury, and he/she shall so act. He/She shall likewise act if instructed to do so by the City. Any compensation claimed by the Contractor on account of such emergency work will be determined by the City as provided in this Contract regarding Change Orders.
d. The Contractor shall avoid damage as a result of his/her operation to existing sidewalks, streets, curbs, pavements, utilities (except those which are to be replaced or removed), adjoining property, etc., and he/she shall at his/her own expense completely repair any damage thereto caused by his/her operation.
e. The Contractor shall shore up, brace, underpin, secure and protect, as may be necessary, all foundations and other parts of existing structures adjacent to, adjoining, and in the vicinity of, the Site which may be in any way affected by the excavations or other operations connected with the execution of this Contract. The Contractor shall be responsible for the giving of any and all required notices to any adjoining or adjacent property owner or other party before commencement of any work. The Contractor shall indemnify and save harmless the City of Muskegon from the damages on account of settlements or the loss of lateral support of adjoining property and from all loss or expense and all damages for which the City may become liable in consequence of such injury or damage to adjoining and adjacent structures and their premises.

3.0.30 SURVEY MONUMENTS

a. Survey monuments relative to governmental surveys such as a U.S. Coast and Geodetic and the City of Muskegon datum plane reference are to be preserved and left undisturbed by the Contractor. Land survey monuments such as Section corners, 1/4 and 1/8 corners, or other alignment points of reference, including property corners of individual parcels of land, are to be respected and left undisturbed. When found in conflict with proposed work, the Contractor shall immediately notify the Authorized Representative in charge of work, whereupon instructions shall be given to the Contractor for preservation of the Survey Point. If housings or boxes for protection are required, the City shall furnish to the Contractor at no cost the necessary materials. The Contractor, in turn, will install the materials at no cost to the City.
b. If the Contractor damages or destroys known Survey Points of reference, the Contractor shall be responsible for replacement of the monument. The work must be accomplished by a registered land

surveyor in accordance with accepted procedures for such work. The Contractor shall be responsible for all incurred costs.

3.0.31 SANITARY FACILITIES - The Contractor shall furnish, install and maintain ample sanitary facilities for the workers. As the needs arise, a sufficient number of enclosed temporary toilets shall be conveniently placed as required by the sanitary codes for the state and local government. Drinking water shall be provided from an approved source, so piped or transported as to keep it safe and fresh and served from single-service containers or satisfactory types of sanitary drinking stands or fountains. All such facilities and services shall be furnished in accordance with existing and governing health regulations.

3.0.32 USE OF CITY WATER - Upon request and approval, the Contractor may obtain a water supply from the City of Muskegon fire hydrants at no cost, provided that the following conditions are met and exercised:

a. The Contractor's superintendent shall obtain from the Water Department Superintendent a proper connection, including a meter to monitor usage.
b. The Contractor shall only use hydrant wrenches to open and close hydrants; pipe wrenches will not be allowed.
c. The hydrant shall be fully opened when used; volume shall be controlled by an independent hand valve.
d. The Contractor's release shall not be granted until the hydrant connection has been returned to the Water Department and such receipt acknowledged.

3.0.33 USE OF PREMISES

a. The Contractor shall comply with all instructions of the City of Muskegon and the ordinances and codes of the local government regarding signs, advertising, traffic, fires, explosives, danger signals and barricades.
b. The Contractor shall confine his/her equipment, storage of materials, and construction/demolition operations to the Contract limits as shown on the drawings and as prescribed by ordinances or permits, or as may be directed by the City, and shall not unreasonably encumber the Site or public rights-of-way with his/her materials and equipment.
c. The Contractor and his/her Subcontractors may maintain such office and storage facilities on the Site as are necessary for the proper conduct of the work. These shall be located so as to cause no interference to any work to be performed on the Site. The City shall be consulted with regard to locations.
d. The Contractor may furnish and maintain, during the execution of this Project, adequate facilities on the Site or adjacent thereto for the use of the City's representatives.
e. Upon completion of the Project, or as directed by the City, the Contractor shall remove all such temporary structures and facilities as have been placed on the Site, these to become his/her property, and leave the Project Site in the condition required by the Contract.

3.0.34 PARTIAL USE OF SITE IMPROVEMENTS BY THE CITY - The City of Muskegon, at its election, may give notice to the Contractor and place in use those sections of improvements which have been completed, inspected and can be accepted as complying with the Contract, if each such section is reasonably safe, fit and convenient, in the City's opinion, for the use and accommodation for which it was intended, PROVIDED THAT:

a. The use of such sections in no way shall impede the completion of the remainder of the work by the Contractor;
b. The Contractor shall not be responsible for any damages or maintenance costs due directly to the use of such sections;
c. The use of such sections shall in no way relieve the Contractor of his/her liability due to having used defective materials or due to poor workmanship.

3.0.35 REMOVAL OF DEBRIS, CLEANING, ETC. - The Contractor shall periodically, or as directed during the progress of the work, remove and legally dispose of all surplus excavated material and debris, and keep the Project Site and public rights of way reasonably clear. Upon completion of the work, he/she shall remove all temporary construction facilities, debris and unused materials provided for the work, and put the whole Site of the work and

public rights of way in a neat and clean condition. Trash burning on the Site will be subject to prior approval of the City of Muskegon and existing state and local regulations.

3.0.36 ACCIDENT PREVENTION

a. The Contractor shall exercise proper precaution at all times for the protection of persons and property and shall be responsible for all damages to persons or property, either on or off the Site, which occur as a result of his/her prosecution of the work. The safety provisions of applicable laws and building, construction or demolition codes shall be observed, and the Contractor shall take, or cause to be taken, such additional safety and health measures as the City may determine to be reasonably necessary.
b. Machinery, equipment and all hazards shall be guarded in accordance with the safety provisions of the "Manual of Accident Prevention of Construction", published by the Associated General Contractors of America, Inc., to the extent that such provisions are not in conflict with applicable local laws.
c. The Contractor shall maintain an accurate record of all cases of death, occupational disease and injury requiring medical attention or causing loss of time from work, arising out of and in the course of employment on work under this Contract. The Contractor shall promptly furnish the City with reports concerning these matters.
d. The Contractor shall indemnify and save harmless the City of Muskegon from any claims for damages resulting from personal injury and/or death suffered or alleged to have been suffered by any person as a result of any work conducted under this Contract.

3.0.37 SPECIFICATIONS AND DRAWINGS

a. The City of Muskegon will furnish the Contractor without charge one (1) copy of the Contract Documents, including General, Technical and Special Specifications complete with plans, drawings, maps, etc. Additional copies requested by the Contractor will be furnished at cost.
b. In case of discrepancy, figured dimensions shall govern over scaled dimensions; Bid Proposal over plans; plans over Special Specifications; and Special Specifications over General and Technical Specifications.
c. When discrepancies are found in drawings or Specifications, the matter shall be immediately submitted to the City, without whose decision said discrepancy shall not be adjusted by the Contractor except at his/her own risk and expense.

3.0.38 SHOP DRAWINGS FROM THE CONTRACTOR

a. All required shop drawings, machinery details, layout drawings, etc., shall be submitted to the City in three (3) copies for approval sufficiently in advance of requirements to afford ample time for checking, including time for correcting, resubmitting and rechecking, if necessary.
b. The Contractor may proceed, only at his/her own risk, with manufacture or installation of any equipment or work covered by said Shop Drawings, etc., until they are approved. No claim by the Contractor for extension of the Contract Time will be granted by reason of the Contractor's failure in this respect.
c. Any drawings submitted without the Contractor's stamp of approval will not be considered and will be returned to him/her for proper resubmission. If any drawings show variations from the requirements of the Contract because of standard shop practice or other reason, the Contractor shall make specific mention of such variation in his/her letter of transmittal in order that, if acceptable, suitable action may be taken for proper adjustment of Contract Price and/or Time; otherwise, the Contractor will not be relieved of the responsibility for executing the work in accordance with the Contract even though the drawings have been approved.
d. If a shop drawing is in accord with the Contract or indicates only a minor adjustment, in the interest of the City, without involving a change in Contract Price and/or Time, the City may approve the drawing. Such approval shall be general, shall not relieve the Contractor from his/her responsibility for adherence to the Contract or for any error in the drawing, and shall contain substantially the following language:
e. "The modification shown on the attached drawing is approved in the interest of the City of Muskegon to effect an improvement for the Project and is ordered with the understanding that it

does not involve any change in the Contract Price or Time; that it is subject generally to all Contract stipulations and covenants; and that it is without prejudice to any and all rights of the City of Muskegon under the Contract and surety bond or bonds."

3.0.39 SAMPLES, CERTIFICATES AND TESTS

a. The Contractor shall submit all equipment samples, certificates, affidavits, etc., as called for, or as required by the City, promptly after award of the Contract and acceptance of the Contractor's bond.
b. The Contractor shall furnish promptly all materials reasonably necessary for any tests which may be required.
c. No such material or equipment shall be manufactured or delivered to the Site, except at the Contractor's own risk, until the required samples or certificates have been approved in writing by the City.
d. Machinery, mechanical or other equipment, materials or articles installed or used without such prior City approval shall be at the risk of subsequent rejection.
e. Each sample submitted by the Contractor shall carry a label giving the name of the Contractor, the Project for which it is intended, and the name of the producer. Each shall be accompanied by a certificate or letter from the Contractor which shall"
    i. State that the sample complies with the Contract requirements;
    ii. Give the name and brand of the product and its place of origin;
    iii. Give the name and address of the producer;
    iv. Include or be accompanied by all specifications or other detailed information which will assist the City in determining the acceptability of the sample promptly;
    v. Include the statement that all materials or equipment furnished for use in the Project will comply with the samples and/or certified statements.
f. Where machinery, mechanical or other special equipment is to be installed under this Contract, the Contractor shall furnish each manufacturer's detailed specifications to the City for approval together with full information in regard to proposed installations.
g. Materials specified by reference to the number or symbol of a specific standard, such as an A.S.T.M. Standard, a Federal specification or other similar standard, shall comply with requirements in the latest revision thereof and any amendment or supplement thereto in effect on the date of the Invitation for Bids, except as limited to type, class or grade, or modified in such reference. The Standards referred to shall have full force and effect as though printed herein.
h. Approval of any materials shall be general only, and shall not constitute a waiver of the City's right to demand full compliance with Contract requirements. With regard to a general approval, the City may reject materials, equipment and accessories for cause after actual delivery to the City and such check tests have been made as deemed necessary in each instance, even though such materials and articles have been given general approval.
i. The City's Authorized Representative may test such materials as deemed advisable on the Project Site.
j. All tests by the City will be performed in such manner as not to delay the work unnecessarily, and shall be made in accordance with the provisions of the Specifications.
k. Any delay in the work caused by late or improper submission of samples or certificates for approval shall not be considered just cause for an extension of the Contract Time.
l. If materials, equipment or accessories which fail to meet check tests have been incorporated in the work, the City will have the right to cause their removal and replacement by proper materials, or to demand and secure such reparation by the Contractor as is equitable.
m. Except as otherwise specifically stated in this Contract, the costs of sampling and testing will be divided as follows:
    i. The Contractor shall furnish without extra cost, including packing and delivery charges, all samples required for testing purposes;
    ii. The Contractor shall assume all costs of re-testing materials which fail to meet Contract requirements;
    iii. The Contractor shall assume all costs of testing materials offered in substitution for those found deficient; and

iv. The City of Muskegon will pay all other expenses for testing.

n. Certificates of Compliance: In lieu of test samples and upon request of the City, the Contractor shall provide, upon delivery and through his/her supplier, a witnessed, notarized and signed certification complete with documented test results that the material meets or exceeds the desired specifications. The signer of the certification must be titled officer of the material company, and the documented test results must be obtained through an independent testing laboratory. Costs for such documentation shall be borne by the Contractor.

3.0.40 INSPECTION BY THE CITY

a. All materials and workmanship shall be subject to inspection, examination, and/or test by the City of Muskegon at any and all time during manufacture or construction and at any and all places where such manufacture or construction is carried on. The inspection of materials as a whole, or in part, will generally be made at the Project Site, subject to the provisions of paragraph b following.

b. Inspection of materials and appurtenances to be incorporated in the improvements embraced in this Contract may be made at the place of production, manufacture or shipment whenever the quantity justifies it. Such inspection and acceptance, unless otherwise stated, shall be final, except in regard to (1) latent defects, (2) departures from specific requirements of the Contract, (3) damage or loss in transit, or (4) fraud or such gross mistakes as amount to fraud.

c. The City shall have the right to reject defective material and workmanship or require its correction. Unacceptable workmanship shall be satisfactorily corrected. Rejected material shall be promptly segregated and removed from the Project Site and replaced with material of specified quality without charge therefor.

d. If the Contractor fails to proceed at once with the correction of rejected workmanship or defective material, the City may, by contract or otherwise, have the defects remedied, or rejected materials removed from the project area, and charge the cost of the same against the monies which may be due the Contractor without prejudice to any other rights or remedies of the City.

e. The Contractor shall notify the City sufficiently in advance of back-filling or concealing any facilities to permit proper inspection. If any facilities are concealed without approval or consent of the City, the Contractor shall uncover for inspection, and recover, such facilities all at his/her own expense, when so requested by the City of Muskegon.

f. Should it be considered necessary or deemed advisable by the City at any time before final acceptance of the entire work to make an examination of work already completed by uncovering the same, the Contractor shall, on request, promptly furnish all necessary facilities, labor and/or material.

g. If such work is found to be defective in any important or essential respect due to the fault of the Contractor or the fault of his/her Subcontractors, the Contractor shall defray all the expenses of such examination and or satisfactory reconstruction.

   i. If, however, such work is found to meet the requirements of the Contract, the actual cost of labor and material necessarily involved in the examination and replacement, plus 15% of such costs to cover superintendence, general expenses and profit, shall be allowed the Contractor; and he/she shall be granted in addition a suitable extension of time if completion of the work under the entire Contract has been delayed on account of the additional work involved by such request.

   ii. A semi-final inspection will be scheduled by the City when all construction has been completed.

   iii. When the City has accomplished its semi-final inspection, determined all deficiencies (if any) have been corrected, and the project is completed and functional, a final inspection will be scheduled.

h. Neither inspection, testing, approval nor acceptance of the work in whole of in part by the City or its agents shall relieve the Contractor or his/her sureties of full responsibility for materials furnished or work performed not in strict accordance with the Contract.

3.0.41 CHANGES IN THE WORK

a. Except for the purpose of affording protection against any emergency endangering life or property, the Contractor shall make no change in the materials used; in the specified manner of constructing

and/or installing the Improvements; nor supply additional labor, services or materials beyond that actually required for the execution of the Contract, unless pursuant to a written order from the City authorizing the Contractor to proceed with the change. No claim for an adjustment of the contract price will be valid unless so ordered.

b. The City may make changes in the scope of the work required to be performed by the Contractor under the Contract; make additions thereto; or omit work therefrom without invalidating the Contract; without relieving or releasing the Contractor from any of his/her obligations under the Contract or any guarantee given by him/her pursuant to the Contract; without affecting the validity of the guaranty bonds; and without relieving or releasing the surety or sureties of said bonds.

c. All such changes in work shall be executed under the terms of the original Contract as expressly provided for.

d. In the case where unit prices ARE contained in the Agreement, the City may order the Contractor to proceed with desired changes in the work with the value of such changes being determined by the measured quantities involved and the applicable unit prices specified in the Contract, unless said changes increase or decrease the total contract price more than twenty-five percent (25%).

3.0.42 CHANGE ORDERS

a. Change Orders shall be executed:
   i. If applicable unit prices ARE NOT contained in the Proposal;
   ii. If the total net change ordered by the City increases or decreases the contract price more than twenty-five percent (25%);
   iii. If it becomes necessary to revise the completion date due to causes which are not the fault of the Contractor;
   iv. Upon successful completion of the Project and after final quantities are in confirmation, a Change Order Balance shall be made out by the Authorized Representative and executed by both parties. This quantity balance shall identify the total project cost and allow the Contractor to present the written Request for Final Payment.

b. Acceptable Methods for Cost Determination:
   i. Unit Price Method – The City shall request and the Contractor shall submit a written proposal describing each individual unit of work and the unit price for each item.
   ii. Lump Sum Method – The City shall request and the Contractor shall submit a written proposal describing the work and the lump-sum price for the described work.
   iii. Cost-Plus, Limited Basis Method – If other methods are not acceptable and prompt agreement between the parties cannot be reached, the City may order the Contractor to proceed with the work on a cost-plus, limited basis. A Cost-Plus, Limited Basis is defined as the net cost of the Contractor's labor, materials and equipment plus 15% of said net cost to cover overhead and profit. The total cost not to exceed an amount to be specified.
      1. Costs not eligible to be included in the Cost-Plus, Limited Basis are: Insurances, bonds, payroll costs for the Contractor's officers or executives, managers, engineers, lawyers or administrative personnel. These typical costs are to be considered a part of the overhead factor.
   iv. City of Muskegon Credit Method – If the City deems it not expedient to require the Contractor to correct work not done in accordance with the Contract, the City may issue a Credit Change Order to create an equitable deduction from the Contract Price. Said deduction will be made by agreement between the Contractor and the City of Muskegon and subject to settlement, in case of dispute, as provided in these Documents.

c. Change Order Procedure – After the Contractor's proposal has been reviewed and found acceptable by both parties, the City will prepare a Change Order in accordance therewith for execution by the Contractor on the appropriate form required by the funding agency or by using the City of Muskegon change order form.

d. Change Order Procedure Documentation shall include:
   i. A detailed reason for and description of the work, its location, quantity, rate and method of payment as described above.
   ii. A definite statement as to the resulting change in the Contract Price and/or time.

iii. The statement that all work involved in the change shall be performed in accordance with the Contract requirements except as modified by this Change Order.

3.0.43 DISPUTES AND CLAIMS

a. All disputes arising under this Contract or its interpretation, except those disputes covered by Federal Labor Provisions, whether involving law or fact, or both, or extra work, and all claims for alleged breach of Contract shall be presented by the Contractor to the City for decision within ten (10) days of commencement of dispute.
b. All papers pertaining to claims shall be filed in quadruplicate. Such notice need not detail the amount of the claim but shall state the facts surrounding the claim in sufficient detail to identify and prove the claim, together with its character and scope. In the meantime, the Contractor shall proceed with the work as directed.
c. Any claim not presented within the time limit specified in Paragraph (a) above shall be deemed to have been waived, except that if the claim is of a continuing character and notice of the claim is not given within then (10) days of its commencement, the claim will be considered only for a period commencing ten (10) days prior to the receipt by the City of notice thereof.
d. After review of the claim, the City will decide upon action to be taken. Each decision by the governing body of the City of Muskegon will be in writing and will be mailed to the Contractor by registered mail, return receipt requested, directed to his/her last known address.
e. If the Contractor does not agree with any decision of the City, he/she shall in no case allow the dispute to delay the work but shall notify the City promptly that he/she is proceeding with the work under protest, and he/she may then except the matter in question from the final release upon Request for Final Payment in substantially.

3.0.44 CLAIMS FOR EXTRA COST

a. If the Contractor claims that any instructions by drawings or otherwise involve extra cost or extension of time, he/she shall, within ten (10) days after the receipt of such instructions, and in any event before proceeding to execute the work, submit his/her protest thereto in writing to the City stating clearly and in detail the basis of this objection. No such claim will be considered unless so made.
b. Claims for additional compensation for extra work due to alleged errors in ground elevations, contour lines, or bench marks will not be recognized unless accompanied by certified survey data made prior to the time the original ground was disturbed, which clearly shows that errors exist which resulted, or would result, in handling more material or performing more work than would be reasonably estimated from the drawings and maps issued.
c. Any discrepancies which may be discovered between actual conditions and those represented by the drawings and maps shall at once be reported to the City, and work shall not proceed except at the Contractor's risk until written instructions have been received by him/her from the City.
d. If, on the basis of the available evidence, the City determines that an adjustment of the Contract Price and/or Contract Time is justifiable, the procedure shall be as provided in Item 39 (Part 3, Section I), Change Orders.

3.0.45 DELAYS AND LIQUIDATED DAMAGES

a. Liquidated Damages for Delays. If the work is not completed within the time stipulated in this Contract, including any extensions of time for excusable delays as provided, the Contractor and/or his sureties shall be liable for and shall pay to the City of Muskegon sum of three hundred dollars ($300.00) for each calendar day of delay as fixed, agreed and liquidated damages (it being impossible to determine the actual damages occasioned by the delay), commencing from the time stipulated for completion until such work is satisfactorily completed and accepted.
b. Excusable Delays. The right of the Contractor to proceed shall not be terminated nor shall the Contractor be charged with liquidated damages for any delays in the completion of the work DUE TO:
    i. Any acts of government, including controls or restrictions upon or requisitioning of materials, equipment, tools or labor by reason of war, national defense or any other national emergency;

ii. Any acts of the City of Muskegon;

iii. Causes not reasonably foreseeable by the parties to this Contract at the time of the execution of the Contract which are beyond the control and without the fault or negligence of the Contractor including, but not restricted to: Acts of God or of the public enemy; acts of another contractor in the performance of some other contract with the City; fires; floods; epidemics; quarantine; restrictions; strikes; freight embargoes; and weather of unusual severity such as hurricanes, tornadoes, cyclones and other extreme weather conditions; and

iv. Any delay of any Subcontractor occasioned by any of the causes specified in subparagraphs 1, 2 and 3 above.

PROVIDED, HOWEVER, that the Contractor promptly notify the City within ten (10) days in writing of the cause of the delay.

c. Upon receipt of such written notification, the City shall ascertain the facts and the cause and extent of the delay. If, upon the basis of the facts and in compliance with the terms of this Contract, the delay is properly excusable, the City shall extend the time for completing the work for a period of time commensurate with the period of excusable delay through the execution of a written Change Order.

3.0.46 PAYMENTS TO THE CONTRACTOR

a. Partial Payments

i. Partial payments will be made as specified herein for work completed and for fabricated or processed non-perishable materials delivered for the use on the project. Processing of payments will be completed as soon as practicable; however, no claim will be considered for late payment of estimates.

ii. Partial payments will be issued on the second Friday of each month on the basis of the value of the work completed during the estimate period, less the percentage retained as specified herein, provided the written orders of the Engineer have been or are being fulfilled, provided the time for completion has not elapsed, and provided that at least one-half of the contract amount or $1,000 has been earned during the estimate period. Said payments will be based upon estimates prepared by the Engineer of the value of the work performed, and estimates of the Engineer are subject to final balancing at the time of the final estimate. In the event that the prepared estimate is not submitted with sufficient time to process payment on the second Friday of the month, payment of the estimate will be processed for payment on the fourth Friday of the month. As a result, the Engineer's estimates may not be relied upon by a Contractor as a basis to make payment to a Subcontractor.

iii. Before each payment by the City to the Contractor under this contract, the Contractor shall furnish the City with a certificate in duplicate, substantially to the effect that the Contractor and each Subcontractor has complied with the wage and other labor standards provisions of this contract. The Form of certificate to be used will be furnished by the City.

iv. Before making any partial payment, the City may require the Contractor to present a verified written statement showing the amounts he/she owes for labor performed and materials furnished along with the names and addresses of the persons to whom which sums are due.

v. In case the Contractor shall have sublet a part of the work, the statement shall also show the sum owed to the Subcontractor showing names and addresses of persons performing labor or furnishing material under that subcontract along with the respective amounts due such persons.

vi. The City must pay the amounts due directly to the creditors of the Contractor or Subcontractor so listed, deducting the amount from that due the Contractor or Subcontractor.

vii. Partial payments made by the City to the Contractor are monies advanced for the purpose of assisting the Contractor to expedite the work under this contract. The Contractor shall be responsible for the care and protection of all materials and work upon which payments have been made until final acceptance of such work and materials by the City.

viii. Any such partial payments shall not constitute a waiver of the right of the City to require the fulfillment of all terms of the contract, and the delivery of all improvements embraced therein, complete and satisfactory in all details.

b. Withholding Payments

i. The City may withhold from any payment otherwise due the Contractor so much as may be necessary to protect the City of Muskegon.
ii. The City may also elect to withhold any amounts the Contractor owes to any subcontractor or materials dealer for work performed or materials furnished by them.
iii. Any amount due to the City of Muskegon for liquidated damaged, or other purposes as provided under the terms of this contract, shall be deducted from the final payment due the Contractor.
iv. The foregoing provisions shall be construed solely for the benefit of
v. the City of Muskegon and will not require the City Commission to determine or adjust any claims or disputes between the Contractor and his/her Subcontractors or materials dealers, or to withhold any monies for their protection unless the City Commission elects to do so.
vi. The failure or refusal of the City to withhold any monies from the
vii. Contractor shall in nowise impair the obligations of any surety or sureties under any bond or bonds furnished under this contract.
viii. Right of Setoff. The City is entitled by this agreement to set off and retain from any payment to the Contractor or any Subcontractor or material supplier, all amounts which are due and owing to the City of Muskegon from said Contractor, Subcontractor, or material supplier for any reason,. The said right or setoff also applies to any unpaid taxes to be collected by the City. This right of setoff shall be subject only to the right of a surety providing bonds or guarantees for the project be due and owing to a Subcontractor or material supplier, and which are required to be paid by the surety. If no claim against any such surety has been made, then this right of setoff shall be invoked.
ix. This right to setoff shall not apply in the case of non-management individuals employed by a Contractor or Subcontractor who have claims solely for wages earned in the performance of labor in this project. In the event there remain outstanding such claims for labor, the right of setoff shall be subordinate to such claims even though no claim against a surety has been made.

c. Final Payment
i. Final payment to the Contractor shall be made subject to the furnishing of a satisfactory release of all claims against the City arising under and by virtue of this contract, other than such claims as may be specifically accepted by the Contractor from the operation of release as provided under “Disputes and Claims”.
ii. The Contractor shall prepare his/her Requisition for Final Payment after final inspection and acceptance by the City for all work under the contract.
iii. The Contractor shall additionally secure the consent of his/her surety in regard to Final Payments as well as the retainage withheld by the City.
iv. Requisition for Final Payment can be based upon the total project dollar amount as described in the required Balancing Change Order. The total amount of the final payment will be that amount agreed upon by the parties hereto MINUS all previous payments.
v. Before making final payment, the City may require the Contractor to furnish releases or receipts from all Subcontractors having performed any work and from all persons having supplied materials, equipment installed on the project, and services to the Contractor.
vi. If the City deems it advisable to make payment in part or full to the Contractor without requiring the furnishing of such releases or receipts, any payments so made shall in nowise impair the obligations or any surety or sureties furnished under this contract.

3.1 TIME CHANGE ORDER

Project No.: _____ **Contract No.:** _____

Contractor Information:

Company Name: _____

Street Address: _____

City, State Zip: _____

Contact Name: _____

Requested Time Change Order Date: _____

In connection with the above referenced Contract, dated: _____,

for the Project entitled: _____,

The following change is ordered, subject to conditions hereinafter set forth:

The Contract Time is extended _____ calendar days from the original

Contract Completion Date of: _____to: _____.

The City of Muskegon has duly determined that:

- The delay was due to unforeseeable causes beyond your control and without your fault or negligence:
- Notice of the cause of the delay was given within the time and in the manner prescribed by the Contract.
- The causes of delay justify and require an extension of the time as herein provided as a matter of legal right without the assertion of a claim by the owner for (actual) (liquidated) damages because of the Contractor's failure to complete the work within the number of days specified by the Contract.

The aforementioned changes, and work affected thereby, are subject to all contract stipulation and covenants.
The Rights of the city of Muskegon are not prejudiced.
All claims against the City of Muskegon which are identical to or as a consequence of the aforementioned change are satisfied

---

Contractor Approval

_____
Authorized Representative Signature Date

_____
Printed Name Title

City of Muskegon Approval

_____
Authorized Representative Signature Date

_____
Printed Name Title

_____
Prepared By Date

3.2 CONTRACT CHANGE ORDER

CONTRACTOR	CONTRACT	DATE	11/10/2017
		CHANGE ORDER No.	1

	ITEM OF WORK DESCRIPTION, REASON, LOCATION OF CHANGE	UNIT OF MEASURE	QUANTITY PROPOSAL	QUANTITY AS BUILT	QUANTITY INCREASE +	QUANTITY DECREASE -	UNIT COST	AMOUNT INCREASE	AMOUNT DECREASE
1								$0.00	$0.00
2								$0.00	$0.00
3								$0.00	$0.00
	CHANGE REQUEST EFFECIVE DATE:						TOTALS	$0.00	$0.00
					ORIGINAL CONTRACT PRICE:		$0.00		
							NET +/-	$0.00	
					REVISED CONTRACT PRICE:		$0.00		

MUSKEGON
West Michigan's Shoreline City
www.shorelinecity.com

ENGINEERING DEPARTMENT	CONTRACTOR APPROVAL	CITY OF MUSKEGON APPROVAL
	AUTHORIZED REPRESENTATIVE AND DATE	AUTHORIZED REPRESENTATIVE AND DATE
PREPARED BY DATE	PRINTED NAME AND TITLE	PRINTED NAME AND TITLE

3.3 CONTRACTOR'S CERTIFICATE & RELEASE REQUEST FOR FINAL PAYMENT

FROM: _____
(Name of Contractor)

TO: The City of Muskegon

RE: Contract No.

ENTERED INTO THE _____ DAY OF _____ BETWEEN THE CITY OF MUSKEGON, 933 TERRANCE ST, MUSKEGON, MICHIGAN 49443

AND

_____
(Contractor Street Address) (City) (State) (ZIP)

FOR THE: _____
(Name of Operations to be performed)

UNDER THE CONTRACT ENTITLED: _____

PROJECT NO. _____
LOCATED IN THE CITY OF MUSKEGON, MICHIGAN;

KNOW ALL MEN BY THESE PRESENTS:

1. 1.The undersigned hereby certifies that there is due from and payable by the CITY OF MUSKEGON to the CONTRACTOR under the Contract and duly approved Change Orders and modifications THE BALANCE OF $ _____ .

2. The undersigned further certifies that in addition to the amount set forth in Paragraph 1, there are outstanding and unsettled the following items which the Contractor claims are just and due and owing by the City of Muskegon to the Contractor:

   a. _____
   b. _____
   c. _____
   d. _____
   (Itemize claims and amounts due; if none, so state)

3. The undersigned further certifies that all work required under this Contract, including work required under Change Orders Nos. _____, has been performed in accordance with the terms thereof, and that there are no unpaid claims for materials, supplies or equipment and no claims of laborers or mechanics for unpaid wages arising out of the performance of this Contract, and that the wage rates paid by the Contractor and all Subcontractors were in conformity with the Contract provisions relating to said wage rates.

4. Except for the amounts stated under Paragraphs 1 and 2 hereof, the undersigned has received from the CITY OF MUSKEGON all sums of money payable to the undersigned under or pursuant to the above-mentioned Contract or any modification or change thereof.

5. That in consideration of the payment of the amount stated in Paragraph 1 hereof, the undersigned does hereby release the CITY OF MUSKEGON from any and all claims arising under or by virtue of this Contract, except the amount listed in Paragraph 2 hereof; provided, however, that if for any reason the City of Muskegon does not pay in full the amount stated in Paragraph 1 hereof, said deduction shall not affect the validity of this release, but the amount so deducted shall be automatically included under Paragraph 2 as an amount which the Contractor has not released but will release upon payment thereof.

   The Contractor further certifies that upon the payment of the amount listen in Paragraph 2 hereof, and of any amount which may be deducted from Paragraph 1 hereof, the Contractor will release the City of Muskegon from any and all claims of any nature whatsoever arising out of said Contract or modification thereof, and will execute such further releases or assurances as the City may request.

IN WITNESS WHEREOF, the undersigned has signed and sealed this instrument this _____ day of _____, 20 _____.

(SEAL) CONTRACTOR: _____

BY: _____

_____
(Printed name and title of signer)

_____, the affiant signing this instrument, being first duly sworn on oath, deposes and says: First, that he/she is the

_____of the_____
(Title) (Name of company)

Second, that he/she has read the foregoing certificate by him/her subscribed as

_____of the_____
(Title) (Name of company)

Affiant further states that the matters and things stated are, to the best of his/her knowledge and belief, true.

Affiant: _____

Subscribed and sworn to before me this _____ day of _____,_20_____

_____
(Notary)

My commission expires _____

3.4 CONTRACTOR AFFIDAVIT - SURETY RELEASE

State of _____)
) ss.
County of _____)

_____
(Contractor)

Being duly sworn, deposes and says that he/she entered into a contract with the City of Muskegon on the _____ day of _____ for the construction of the City of Muskegon.

Project No**.** _____

Project Title: _____

Deponent further says that the work under the terms of the said contract has been completed and all indebtedness incurred by him/her to subcontractors, material suppliers, and persons in his/her employ has been paid in full.

Deponent further says this affidavit is furnished before final payment, or before the ten percent (10%) withheld in accordance with the contract may be reduced.

Deponent further says this affidavit is made pursuant to provisions of Public Act 179 of 1891, section 4, as amended.

Witnesses: SIGNED

_____ _____

_____ _____

Subscribed and sworn to before me

This _____day of _____, 20_____

_____

_____
Title

3.5 CONSENT OF SURETY

We, as surety on the above described contract, hereby give our consent to the payment to the Contractor as indicated above.

Date*: _____ **Signed: _____**
(Attorney-in-fact)

NOTE: Two completed copies of this or similar form MUST BE SUBMITTED to and accepted by the City of Muskegon BEFORE REDUCTION OF 10% RETAINAGE AND FINAL PAYMENT WILL BE MADE.

***Date contract awarded by the city commission**

SECTION 2

3.6 AFFIRMATIVE ACTION

NOTICE OF REQURIEMENT FOR AFFIRMATIVE ACTION
TO INSURE EQUAL EMPLOYMENT OPPORTUNITY AND
PROHIBITING DISCRIMINATION IN EMPLOYMENT
(Federal Executive Order 11243)
Michigan: Elliot-Larson Civil Rights Act

The attention of bidders is particularly called to the requirements for ensuring that employees and applicants for employment are not discriminated against.

During the performance of this contract, the contractor agrees as follows:

The contractor will not discriminate against any employee or applicant for employment because of religion, race, color, national origin, age, sex, height, weight, familial status, marital status, disability, sexual orientation or gender identity, or status as a Vietnam Era Veteran. The contractor will take affirmative action to ensure that applicants are employed and that employees are treated fairly during employment, without regard to their religion, race, color, national origin, age, sex, height, weight, familial status, marital status, disability, sexual orientation or gender identity, or veteran background. Such action shall include, but not be limited to, the following: employment, promotion, demotion, or transfer; recruitment or recruitment advertising, layoff or termination; rates of pay or other forms of compensation; selection for training, including apprenticeship.

LOCAL EMPLOYMENT EFFORT

The City of Muskegon requires that the contractor must hire local trades and labor employees from the City of Muskegon, County of Muskegon and/or this SMSA (Standard Metropolitan Statistical Area) for the duration of this project, insofar as these are available to perform the necessary work. Supervisory and/or technical staff officials are exempt from this requirement.

LABOR STANDARDS PROVISION
EMPLOYMENT AND PREVAILING WAGE AND SALARY REQUIREMENTS

The attention of bidders is particularly called to the requirements covered in these documents concerning the payment of not less than the prevailing wage and salary rates specified, and in regard to conditions of employment with respect to certain categories and classifications of employees.

All laborers and mechanics employed by this contract shall be paid unconditionally and not less than once each week, and without subsequent deduction or the rebate on any account (except such payroll deductions as are permitted by the applicable regulations issued by the City of Muskegon).

SECTION 3

3.7 ADOPTED LABOR STANDARDS PROVISIONS

The following clause is applicable unless this contract is exempt under the rules and regulations of the Secretary of Labor issued pursuant to Executive Order No. 11246 of September 24, 1965 (30FR 12319), as amended. During the performance of this contract, the contractor agrees as follows:

(1) The contractor will not discriminate against any employee or applicant for employment because of race, color, religion, sex or natural origin. The contractor will take affirmative action to ensure that applicants are employed, and that employees are treated during employment, without regard to their race, color, religion, sex, or national origin. Such action shall include, but not be limited to the following: employment, upgrading, demotion, or transfer; recruitment or recruitment advertising; layoff or termination; rates of pay or other forms of compensation; and selection for training, including apprenticeship. The contractor agrees to post in conspicuous place, available to employees and applicants for employment, notices to be provided by the contraction officer setting for the provisions of this nondiscrimination clause.

(2) The contractor will, in all solicitations or advertisements for employees placed by or on behalf of the contractor, state that qualified applicants will receive consideration for employment without regard to race, color, religion, sex, or national origin.

(3) The contractor will send to each labor union or representative of workers with which he has a collective bargaining agreement or other contract or understanding, a notice to be provided by the agency contracting officer, advising the labor union or workers' representative of the contractor's commitments under Section 202 of Executive Order No. 1246 of September 24, 1695, and shall post copies of the notice in conspicuous places available to employees and applicants for employment.

(4) The contractor will comply with all provisions of Executive Order No. 11246 of September 24, 1965, and of the rules, regulations, and relevant orders of the Secretary of Labor.

(5) The contractor will furnish all information and reports required by Executive Order No. 11246 of September 24, 1965, and by the rules, regulations and orders of the Secretary of Labor, or pursuant thereto, and will permit access to his books, records, and accounts by the contracting agency and the Secretary of Labor for the purposes of investigation to ascertain compliance with such rules, regulations, and orders.

(6) In the event of the contractor's noncompliance with the nondiscrimination clauses of this contract or with any of such rules, regulations or orders, this contract may be canceled, terminated, or suspended in whole or in part and the contractor may be declared ineligible for further Government contracts in accordance with the procedures authorized in Executive Order No. 11246 of September 24, 1965, and such other sanctions may be imposed and remedies invoked as provided in Executive Order No. 11246 of September 24, 1965, or by rule, regulation, or order of the Secretary of Labor, or as otherwise provided by law.

(7) The contractor will include the provision of paragraphs (1) through (7) in every subcontract or purchase order unless exempted by rules, regulations, or orders of the Secretary of Labor issued pursuant to Section 204 of Executive Order No. 11246 of September 24, 1965, so that such provisions will be binding upon each subcontractor or vendor. The contractor will take such action with respect to and subcontract or purchase order as may be directed by the Secretary of Labor as a means of enforcing such provisions including sanctions for noncompliance: Provide, however, that in the event the contractor becomes involved in, or is threatened with, litigation with a subcontractor or vendor as a result of such direction. The contractor may request the United States to enter into such litigation to protect the interests of the United States.

3.8 EQUAL EMPLOYMENT OPPORTUNITY CLAUSE

(Incorporated by Reference)

The Equal Employment Opportunity Clause required under Executive Order 11246, the affirmative action commitment for disabled veterans and veterans of the Vietnam era, set forth in 41 CFR 60-250.4 the affirmative action clause for handicapped workers, set forth in 40 CFR 60-741.4 and the related regulations of the Secretary of Labor. 40 CFR Chapter 60, are incorporated by reference in this purchase order. By accepting this purchase order, vendor certifies that it complies with the authorities cited above, and that it does not maintain segregated facilities or permit its employees to perform services at locations where segregated facilities are maintained, as required by 41 CFR 60-1.8

3.9 ANTI-KICKBACK ACT

NOTICE TO CONTRACTORS: The Contractor shall comply with the applicable regulations of the Secretary of Labor, United States Department of Labor, made pursuant to the Copeland Anti-Kickback Act (Title 40 U.S.C., Section 276c), and any amendment or modifications thereof, shall cause appropriate provisions to be inserted in subcontracts to insure compliance therewith by all subcontractors subject thereto, and shall be responsible for the submission of affidavits required by subcontractor thereunder, except as said Secretary of Labor may specifically provide for reasonable limitations, variations, tolerance, and exemptions from the requirements thereof.

Copeland "Anti-Kickback" Act Policy

The Copeland "Anti-Kickback" Act prohibits contractors or subcontractors engaged in building construction or repair from persuading an employee to give up any part of the compensation to which he or she is entitled under his or her employment contract.

NOTICE TO MUNICIPAL EMPLOYEES: *Any employee who offers or approves the offer of a business consideration must ensure that it is ethical and proper in all respects. The offer of a business consideration cannot reasonably be interpreted as an attempt to gain an unfair business advantage or otherwise reflect negatively on the reputation of the City of Muskegon and/or the recipient. The business consideration shall not violate this anti-kickback policy.*

The City of Muskegon's (Muskegon) staff, representatives, and contractors are prohibited from receiving unreasonable compensation from grantors, grantees, contractors, applicants, or any other person or individual for the purpose of receiving preferential treatment of any kind. The guidelines below define Muskegon's policy toward kickbacks and the penalties for offering kickbacks to Muskegon employees, representatives or contractors.

Definition: "*Kickback*" for the purposes of this policy (excluding de minimis gifts), means substantial money, fees, commission, gifts, gratuity, object of value, or offer of employment, which is provided or offered, directly or indirectly, to any City of Muskegon employee, contractor or contracted employee, vendor or vendor employee, or consultant for the purpose of improperly obtaining or rewarding favorable treatment in connection with a City of Muskegon project or contract.

This policy prohibits any person or organization from:

Providing or attempting to provide or offering to provide kickbacks;
Soliciting, accepting or attempting to accept kickbacks; or
Including, directly or indirectly, the amount of kickbacks in any contract awarded by City of Muskegon, contractors, or subcontractors.

Any employee found to be in violation of this policy will be subject to an investigation by the City of Muskegon's Compliance Officer to determine if the policy was infringed upon.
Depending on the results of the investigation, appropriate discipline will be determined. The employee may be subject to civil or criminal penalties as provided under U.S. law.

Any applicant, grantee, contractor, consultant, or vendor in violation of this policy will be prohibited from participation in any City of Muskegon project, contract, or activity and may be subject to additional civil or criminal penalties as provided under U.S. law (Title 40 U.S.C., Section 276c).

Muskegon reserves the right to recover damages from any person who knowingly engages in such prohibited conduct and from any person whose employee, contractor, or subcontracted employee provides, accepts, or charges a kickback.

SECTION 4

3.10 PREVAILING WAGE DECISION

THIS IS NOT A PREVAILING WAGE PROJECT

PART 4 – CITY OF MUSKEGON ENGINEERING SPECIFICATIONS

CITY OF MUSKEGON

OFFICE OF THE CITY ENGINEER

STANDARD CONSTRUCTION SPECIFICATIONS

DIVISION 1
GENERAL DEFINITIONS

Approved by the City Commission
February 09, 2010

DIVISION 1
GENERAL DEFINITIONS

Whenever the words hereinafter defined, or any pronouns used in their stead, occur in Contract or any included documents, they shall have the meanings herein given.

A.S.T.M. - American Society for Testing Materials

A.N.S.I. - National Standards Institute

A.W.W.A. - American Water Works Association

A.A.S.H.O. - The American Association of State Highway Officials

M.D.O.T. - Michigan Department of Transportation

M.M.U.T.C.D. - Michigan Manual of Uniform Traffic Control Devices

CITY - City of Muskegon.

COUNTY - Muskegon County.

D.E.Q. - Department of Environmental Quality.

CITY OF MUSKEGON

OFFICE OF THE CITY ENGINEER

STANDARD CONSTRUCTION SPECIFICATIONS

DIVISION 2
MATERIALS

Approved by the City Commission
February 09, 2010

2.01 MATERIALS

All Materials, Unless Specified Otherwise, Shall conform to the most Current Michigan Department of Transportation Standard Specifications for Construction or subsequent revision thereof.

2.02 SEWER PIPE

2.02.01 Vitrified Clay Pipe Extra Strength

Vitrified Clay Pipe Extra Strength shall conform to the requirements of A.S.T.M. designation C-700 E.S. or subsequent revision thereof.

2.02.02 Polyvinyl Chloride (PVC) Pipe

Polyvinyl Chloride (PVC) Pipe shall conform to the requirements of A.S.T.M. designation D-3034 SDR 35, D-3034 SDR 26 or subsequent revision thereof.

2.02.03 Reinforced Concrete Pipe

Reinforced Concrete Pipe shall conform to the requirements of A.S.T.M. designation C-76-88 26 or subsequent revision thereof.

2.03 SEWER PIPE JOINTS

2.03.01 Vitrified Clay Pipe Joint

Vitrified Clay Pipe Joint shall conform to the requirements of A.S.T.M. designation C-425 for flexible compression rubber gasket or subsequent revision thereof.

2.03.02 Polyvinyl Chloride (PVC) Pipe Joint

Polyvinyl Chloride (PVC) Pipe Joint shall conform to the requirements of A.S.T.M. designation D-3212, F-477 for flexible compression rubber gasket or subsequent revision thereof.

2.03.03 Reinforced Concrete Pipe Joint

Reinforced Concrete Pipe Joint shall conform to the requirements of A.S.T.M. designation C-443 for flexible compression rubber gasket or subsequent revision thereof.

2.04 WATERMAIN

2.04.01 Ductile Cast Irion Pipe

Ductile Cast Iron Pipe shall conform to the requirements of the current A.N.S.I. / A.W.W.A. Specification C-151 / A 21.51. Pipe thickness shall be designed in accordance with A.N.S.I. / A.W.W.A. C-150 / A 21.50. Pipe shall have cement mortar lining and seal coating in accordance with A.N.S.I. / A.W.W.A. C-104 / A 21.4 or subsequent revision thereof.

2.04.02 Fire Hydrants

Fire Hydrants shall conform to the requirements of the current A.N.S.I. / A.W.W.A. Specification C-502 Standard for Dry-Barrel Fire Hydrants, and the National Board of Fire Underwriters Laboratories Standard UL246, and Factory Mutual 1510 or subsequent revision thereof.

2.04.03 Valves

Valves shall conform to the requirements of the current A.N.S.I. / A.W.W.A. Specification C-500 Standard for Iron Body, Bronze Mounted, Double Disk, Parallel Seat, A.N.S.I. / A.W.W.A. Specification C-515 Standard for Resilient Seated Gate Valve and A.N.S.I. / A.W.W.A. Specification C-504 Standard for Butterfly Valves or subsequent revision thereof.

2.04.04 Watermain Fittings

Watermain Fittings shall be Ductile Cast Iron and conform to the requirements of the current A.N.S.I. / A.W.W.A. Specification C-153 / A 21.53. Pipe Fittings shall have cement mortar lining and seal coating in accordance with A.N.S.I. / A.W.W.A. C-104 / A 21.4 or subsequent revision thereof.

2.04.05 Watermain Joints

Watermain Joints shall conform to the requirements of the current A.N.S.I. / A.W.W.A. Specification C-111 / A 21.11. All Mechanical Joints shall be restrained, Glands shall be manufactured of Ductile Iron conforming to the requirements of the current A.S.T.M. A-536-80. Restraining devices shall be Ductile Iron heat treated to a minimum hardness of 370 DHN. Dimensions of the gland shall be such that it can be used with the standardized mechanical joint bell and tee-head bolts conforming to A.N.S.I. / A.W.W.A. A-21.11 and A.N.S.I. / A.W.W.A. C-153 / A-21.53. Twist-Off nuts shall be used to insure proper actuating of the restraining devices. The mechanical

joint restraint device shall have a working pressure of at least 250 PSI with a minimum safety factor of 2:1 and shall be EBAN Iron, Inc. Megalug or equal or subsequent revision thereof. Fast-Grip Gaskets shall conform to the requirements of the current A.N.S.I. / A.W.W.A. Specification C-111 / A 21.11. The gasket shall have stainless steel wedges molded or inserted into it, the wedges will have sharp teeth on the inner surface for gripping the spigot of the pipe.

2.04.06 Water Service Material

Water Service Material shall conform to the requirements of the current A.N.S.I. / A.W.W.A. Specification for the Material Specified or subsequent revision thereof.

2.05 EROSION CONTROL

2.05.01 Erosion Control, Inlet Protection, Fabric Drop

The work shall consist of furnishing and installing Erosion Control Inlet Protection Fabric Drop and Shall conform to the most Current Michigan Department of Transportation Standard Specifications for Construction or subsequent revision thereof. Payment shall be at the unit price as described in the proposal and shall represent payment in full for the Erosion Control Inlet Protection Fabric Drop installed and maintained. No other payment will be allowed.

2.06 MEMBRANE SEALNT

2.06.01 Materials

The material shall be self adhering membrane sealant similar to PETRO-TAC or approved equal.

CITY OF MUSKEGON

OFFICE OF THE CITY ENGINEER

STANDARD CONSTRUCTION SPECIFICATIONS

DIVISION 3
CONCRETE

Approved by the City Commission
February 09, 2010

DIVISION 3
CONCRETE

DESCRIPTION - This work shall consist of furnishing Concrete as shown on the construction plans or in the special specifications and shall be placed at the rate specified. Payment shall be at the unit price described in the proposal and shall represent payment in full for all of the work complete.

MATERIALS - All Material, shown on the construction plans or in the proposal, Unless Specified Otherwise, Shall conform to the most Current Michigan Department of Transportation Standard Specifications for Construction or subsequent revision thereof.

CONSTRUCTION METHODS - Unless Specified Otherwise, All Construction Methods Shall conform to the most Current Michigan Department of Transportation Standard Specifications for Construction or subsequent revision thereof.

CITY OF MUSKEGON

OFFICE OF THE CITY ENGINEER

STANDARD CONSTRUCTION SPECIFICATIONS

DIVISION 4
ROADWAY EARTHWORK

Approved by the City Commission
February 09, 2010

DIVISION 4
ROADWAY EARTHWORK

DESCRIPTION - This work shall consist of Roadway Earth Excavation and Embankment CIP shown on the construction plans or in the special specifications and shall be at the rate specified. Payment shall be at the unit price described in the proposal and shall represent payment in full for all of the work complete.

MATERIALS - All Work and Material, shown on the construction plans or in the proposal, Unless Specified Otherwise, Shall conform to the most Current Michigan Department of Transportation Standard Specifications for Construction or subsequent revision thereof.

CONSTRUCTION METHODS - Unless Specified Otherwise, All Construction Methods Shall conform to the most Current Michigan Department of Transportation Standard Specifications for Construction or subsequent revision thereof.

CITY OF MUSKEGON

OFFICE OF THE CITY ENGINEER

STANDARD CONSTRUCTION SPECIFICATIONS

DIVISION 5
REMOVING EXISTING STRUCTURES

Approved by the City Commission
February 09, 2010

DIVISION 5
REMOVING EXISTING STRUCTURES

DESCRIPTION - This work shall consist of removing in whole or part, all bridges, retaining walls, culverts, old pavement surface and base course, curb. Curb and gutter sidewalk, drives, masonry, fence, poles, guard rail, manholes, water valve manholes, catch basins, inlets, sewers, water mains and other structures which are not suitable to be left in place or otherwise objectionable to the City; disposing of the resulting materials and backfilling the resulting holes and pits in a manner approved by the engineer. The boundaries of all areas to be removed shall be saw-cut full depth by the use of a power-driven saw unless otherwise specified by the Engineer. The Contractor shall become the owner of all excess removed material, Determination of the disposal site and disposal of the removed material is the responsibility of the Contractor. No payment shall be made for material disposal.

PAYMENT - The contract unit price for the removal item as set forth in the contract will be payment in full for performing the work complete. If there are no such unit prices in the contract, the work will be considered included with the project under construction.

CITY OF MUSKEGON

OFFICE OF THE CITY ENGINEER

STANDARD CONSTRUCTION SPECIFICATIONS

DIVISION 9
CONCRETE CURB
&
CONCRETE CURB & GUTTER

Approved by the City Commission
February 09, 2010

DIVISION 9
CONCRETE CURB AND CONCRETE CURB AND GUTTER

DESCRIPTION - Concrete Curb and Concrete Curb and Gutter, shall consist of placing either a separate curb or combination curb and gutter of Portland Concrete on the prepared sub grade, and shall have the shape and dimensions as shown on the plans.

MATERIALS - All Material, shown on the construction plans or in the proposal, Unless Specified Otherwise, Shall conform to the most Current Michigan Department of Transportation Standard Specifications for Construction or subsequent revision thereof.

CONSTRUCTION METHODS - Unless Specified Otherwise, All Construction Methods Shall conform to the most Current Michigan Department of Transportation Standard Specifications for Construction or subsequent revision thereof.

CITY OF MUSKEGON

OFFICE OF THE CITY ENGINEER

STANDARD CONSTRUCTION SPECIFICATIONS

DIVISION 10
CONCRETE DRIVEWAY

Approved by the City Commission
February 09, 2010

DIVISION 10
CONCRETE DRIVEWAY

DESCRIPTION - Concrete Driveway, shall consist of placing Portland Concrete on the prepared sub grade, and shall have the shape and dimensions as shown on the plans.

MATERIALS - All Material, shown on the construction plans or in the proposal, Unless Specified Otherwise, Shall conform to the most Current Michigan Department of Transportation Standard Specifications for Construction or subsequent revision thereof.

CONSTRUCTION METHODS - Unless Specified Otherwise, All Construction Methods Shall conform to the most Current Michigan Department of Transportation Standard Specifications for Construction or subsequent revision thereof.

CITY OF MUSKEGON

OFFICE OF THE CITY ENGINEER

STANDARD CONSTRUCTION SPECIFICATIONS

DIVISION 11
CONCRETE SIDEWALK

Approved by the City Commission
February 09, 2010

DIVISION 11
CONCRETE SIDEWALK

DESCRIPTION - Concrete Sidewalk and ADA Ramps, shall consist of placing Portland Concrete on the prepared sub grade, and shall have the shape and dimensions as shown on the plans.

SIDEWALK RAMP ADA - ADA Sidewalk Ramps, Unless Specified Otherwise, Shall conform to the most Current Michigan Department of Transportation Standard Specifications for Construction or subsequent revision thereof.

MATERIALS - All Material, shown on the construction plans or in the proposal, Unless Specified Otherwise, Shall conform to the most Current Michigan Department of Transportation Standard Specifications for Construction or subsequent revision thereof.

CONSTRUCTION METHODS - Unless Specified Otherwise, All Construction Methods Shall conform to the most Current Michigan Department of Transportation Standard Specifications for Construction or subsequent revision thereof.

CITY OF MUSKEGON

OFFICE OF THE CITY ENGINEER

STANDARD CONSTRUCTION SPECIFICATIONS

DIVISION 12
SEWERS

Approved by the City Commission
February 09, 2010

12.01 GENERAL

12.01.01 Definition

As used herein, sewers shall be considered to mean all pipes or conduits intended to transport storm water or waste water and lying within public rights-of-way or easements, including all appurtenances.

12.01.02 Construction Methods

Construction Methods. Unless Specified Otherwise, Shall conform to the most Current Michigan Department of Transportation Standard Specifications for Construction or subsequent revision thereof.

12.02 MATERIALS

12.02.01 General

All materials furnished by the Contractor must conform in all respects to the requirements of Division 2 Materials. Where reference specifications are used, they shall be considered as referring to the latest issue.

12.02.02 Pipe Joints

All Pipe Joints must conform in all respects to the requirements of Division 2 Materials. Where reference specifications are used, they shall be considered as referring to the latest issue. When it is necessary to connect new pipe to existing pipe the connection will be made with the appropriate size Fernco. The Fernco connection unless specified shall be included in the payment for the new sewer pipe. When it is necessary to connect new pipe to existing structures, the connection unless specified shall be included in the payment for the new sewer pipe.

12.02.03 Manhole, Catch Basin and Inlet Materials

a. Concrete: For manhole bases, catch basin bases and inlets shall develop compressive strength of 3,500psi or better in 28 days.

b. Brick: ASTM C-139, Lime-cement, laid radially.

c. Mortar and Plaster: U-1 of ASTM C-55, one part Portland cement, one part Lime and three parts sand, or a prepared mortar mix. (ASTM C-91-Masonry cement).

d. Manhole Steps: Shall be plastic or cast iron, 10 inch x 10 inch overall, tread depth of 5 inches, tread cross section – 1 inch x 1 inch, with 2 ½-inch average rail height.

e. Manhole Castings shall be cast iron and conform to East Jordan no. 1045 or approved equal, The Manhole Cover shall have the City of Muskegon Logo cast into it.

f. Precast Manhole and Catch Basin Units: ASTM C-478 or ASTM C-76 pipe. Joints for precast sections shall be O-ring rubber gasket joints similar to ASTM C-443. Holes for pipe openings shall not be more than 6 inches larger in diameter than the outside diameter of the pipe and shall be filled with non-shrink mortar, Sanitary sewer manholes shall have a Kor-N-Seal, or approved equal, flexible pipe-to-manhole connection, the connection unless specified shall be included in the payment for the new precast manhole. Precast bases shall be set on a 4" thick pea-gravel base.

12.02.04 Disposition of Defective Materials

Any material found during the progress of the work to have cracks, flaws or other defects, will be rejected by the Engineer. All defective material furnished by the Contractor shall be promptly removed by him from the site. Any material furnished by the Owner and found defective shall be set aside by the Contractor and removed from the site by the Owner.

12.03 LINE AND GRADE

12.03.01 Stakes by Owner

The Owner will furnish all line and grade control. Re Staking required by changes or delay in Contractor's schedule or as a result of the Contractor's negligence shall be paid for by the Contractor.

12.03.02 Line and Grade Control

a. Laser Beam: Line and grade controls will be established by the Owner at each laser setup point and at 25-foot, 50-foot and 100-foot points, and thereafter at 100-foot intervals to the next manhole. All other lines and grades necessary for the location and construction of the work, shall be established and maintained by competent personnel employed and paid by the Contractor. The laser beam projector is to be rigidly mounted to its support platforms(s). The Contractor is encouraged to control line and grade for the sewer by using the laser beam through the sewer being laid. Equipment must incorporate above-ground control to assure positive alignment. Either a laser beam projector or surveyor's transit will be required for line control. Any other equipment necessary to control atmospheric conditions in the pipe to keep line and grade to acceptable standards of accuracy shall be furnished and operated by the Contractor.

The laser beam method selected must be approved by the Engineer, and is to be operated by competent personnel employed and paid by the Contractor. Prior to placement of each section of pipe, the laser target shall be repositioned in the pipe previously laid to recheck beam accuracy. If beam projection exceeds 600 feet, line and grade checks will be required at 50-feet intervals.

12.04 CONSTRUCTION METHODS

Construction Methods. Unless Specified Otherwise, Shall conform to the most Current Michigan Department of Transportation Standard Specifications for Construction or subsequent revision thereof.

12.05 CONCRETE CRADLE

Where concrete cradle is required, it shall be constructed as shown on the plans, and the concrete shall conform to the most Current Michigan Department of Transportation Standard Specifications for Construction or subsequent revision thereof.
And as specified on the plans.

12.06 JOINTS ON ALL PIPE:

Joints on all Pipe shall be painted with Manufacturer's approved lubricant or solvent and the joint fully made. If difficulty is encountered in seating, the joint shall be disassembled and carefully inspected for obstructions and proper dimensions.

12.07 MANHOLES, CATCH BASINS AND INLETS

12.07.01 Manholes, Catch Basins and Inlets

All Manholes, Catch Basins and Inlets shall be precast, unless approved otherwise, the precast units shall be installed on a 4" pea gravel sub base with an even and full bearing, the pea gravel shall be included with the structure for payment.

12.07.02 Manhole Invert

Concrete Flow Channel shall be placed in all Manholes, The flow channel shall be the same diameter as the pipe, the concrete shall be formed to the spring line of the pipe and sloped up the inside manhole circumference. Or the pipe can be laid through the manhole. Then concrete shall be formed to the spring line of the pipe and sloped up the inside manhole circumference. The pipe above the spring line shall then be removed. The concrete shall conform to the most Current Michigan

Department of Transportation Standard Specifications for Construction or subsequent revision thereof. Or as specified on the plans.

12.07.03 Castings

Castings shall be set accurately to grade. Manhole castings in established pavements shall fit both the grade and crown of such pavements. Catch basin grates in concrete curb and gutters shall be set ½ inch below the gutter grade, and shall be in a plane parallel with the gutter pan.

12.08 CONNECTIONS

12.08.01 Existing Sewers

Where a manhole exists at the point of connection of new and existing sewers, it shall be repointed and any loose bricks and/or blocks in the walls of the existing manhole shall be re-laid. The cost of such work shall be included in the contract price for the new sewer unless payments are specifically provided in the proposal. Connections of new sewers to existing sewers when encountered in construction and not shown on the plans shall be made where ordered by the Engineer. Such connections shall be made within a manhole except for house service and drain connections. When such sewer connections are made within an existing manhole, The cost of such work shall be included in the contract price for the new sewer unless payments are specifically provided in the proposal. When connections are made with sewers carrying sewage or water, a flume or dam must be installed and pumping maintained as necessary to keep the new work dry until the joints and the concrete have had sufficient time to set.

12.08.02 Future Sewers

Connections for future sewers indicated on the plans shall be plugged or bricked off at the ends. The ends of such future connections in sizes 4” through 21” shall be sealed with an appropriate sized disc and with the same type of jointing material used on the new sewers. For sewers 24” and larger, the end of the sewer shall be bricked off and plastered on the outside. The cost of such work shall be included in the contract price for the new sewer unless payments are specifically provided in the proposal.

12.08.03 Services

Wyes for house service connections shall be placed at locations indicated in the field by the Engineer. All house service connection openings shall be "Y" branches with the spur set on the barrel of the pipe at an angle of 45° for pipe sizes to 24 inch. Tees or wyes may be used for pipe 24 inch and larger. Service connection openings in concrete pipe shall be cast in the upper quarter of the pipe with spur having standard bell dimensions for the service connection. Joint type and material on the services shall be the same as specified for the sewer. The ends of house service shall be closed with standard plugs or caps securely blocked to resist test pressure and sealed with the same jointing material used on the service pipe. House service connections to an existing sewer shall be made with the appropriate size Firinco style connection. The caps and firinco connectors shall be included in the contract price for the new severce unless payments are specifically provided in the proposal. The location of new house service stubs at the lot line shall be marked by a 2 inch by 2 inch wooden stake which shall extend vertically from the plugged end of the service. The strake shall be cut off 4 inches below grade and a ½" x 2' steal rod placed along side the wood stake. The Contractor shall assist the engineer for service connection measurements, measurements are to be taken to the nearest downstream manhole, and the ends of services by measurements from permanent surface witness points. House services shall be laid at right angles to the street line unless otherwise directed and shall be laid on a uniform line unless otherwise directed and shall be laid on uniform line and grade from the riser to the property line unless otherwise specified. The minimum depth at the property line shall be 8 feet below the approved street grade centerline. Where this depth cannot be obtained, the house connection shall be laid with a minimum rise of 1/8 inch per foot between the sewer and the property line. Depths greater than 8 feet at property line may be required where basement elevations are lower than normal.

12.09 TESTING

12.09.01 Pipe Testing

All tests shall be under the supervision of the Engineer, Prior to connecting any active sewer services or extending services beyond the property line, unless specified otherwise, the new sewers and services shall be tested for alignment and leakage. All plastic pipes shall have mandrel testing performed 30 days after placement; the mandrill size shall be 95% of the manufactures actual inside diameter. The sewer shall be thoroughly cleaned before the Engineer is requested to witness or perform any tests.

12.09.02 Alignment

Sewers must be straight between manholes and will be tested for straightness by video taping from manhole to manhole, the video taping will be done by the City at on cost to the Contractor.

12.09.02 Leakage

Unless otherwise called for in the project specifications, the maximum allowable infiltration/exfiltration shall be 299 gallons per day, per inch of diameter, per mile of pipe for ASTM C-443 and ASTM C-425 joints. The joints shall be tight and any visible leakage in the joints and leakage in excess of that specified shall be repaired.

a. Water Testing: The Contractor shall furnish, install and maintain a "V" notch weir, tightly secured to the low end of each section of sewer, so that the infiltration may be checked. When the infiltration is demonstrated to be within the allowable limits, the Contractor shall remove the weirs and all framing, leaving the sewers and manholes clean and free of any debris.

   Exfiltration tests will be required only when the natural or induced ground water table is less than 2 feet over highest point in pipeline under test, including house services. Exfiltration tests shall be made by filling the line to a minimum depth of 2 feet above the high point of the line under test, with allowance for ground water level, and measuring the water required to maintain this level.

b. Low Pressure Air Testing: The Contractor shall furnish all equipment and personnel to conduct an acceptance test using low pressure air. Pipe shall be cleaned and all outlets plugged and securely replaced before beginning test.

12.10 METHOD OF MEASUREMENT

The length of sewer will be measured in lineal feet form center to center of manholes. The house connections will be measured in lineal feet horizontally, from the center line of the sewer to the end of the pipe.

12.11 BASIS OF PAYMENT

12.11.01 Sewer Pipe

"Vitrified pipe sewer," "Reinforced concrete pipe sewer," and "Plastic pipe sewer" of the specified diameters will be paid for at the contract unit price per lineal foot, which price shall be payment in full for all excavation, backfill, disposal of excess material, furnishing materials,

(except when the City furnishes all or part of the materials) including wyes, tees and other fittings, and installing the pipe complete.

12.11.02 House Connections

House connections will be paid for at the contract unit price per lineal foot for installing pipe complete.

12.11.03 Concrete Cradle

"Concrete Cradle" will be paid for at the contract unit price per lineal foot for the work complete.

LOW PRESSURE AIR TEST

MINIMUM HOLDING TIME IN SECONDS REQUIRED FOR PRESSURE TO DROP FROM 3-1/2 TO 2-1/2 PSIG

LENGTH OF LINE IN FEET	PIPE DIAMETER 4"	6"	8"	10"	12"	15"	18"	21"	24"	27"	30"	33"	36"	39"
25	4	10	18	28	40	62	89	121	158	200	284	299	356	418
50	9	20	35	55	79	124	178	243	317	401	495	599	713	837
75	13	30	53	83	119	186	267	364	475	601	743	898	1020	1105
100	18	40	70	110	158	248	356	485	634	765	851	935		
125	22	50	88	138	198	309	446	595	680					
150	26	59	106	165	238	371	510							
175	31	69	123	193	277	425								
200	35	79	141	220	317									
225	40	89	158	248	340									
250	44	99	176	275										
275	48	109	194	283										
300	53	119	211											
350	62	139	227											
400	70	158												
450	79	170												
500	88													
550	97													
600	106													
650	113	170	227	283	340	425	510	595	680	765	851	935	1020	1105

CITY OF MUSKEGON

OFFICE OF THE CITY ENGINEER

STANDARD CONSTRUCTION SPECIFICATIONS

DIVISION 13
WATERMAINS

Approved by the City Commission
February 09, 2010

13.01.01 General

As used herein, watermains shall be considered to mean all pipes, conduits, and all necessary appurtenances to transport water, lying within public rights-of way or easements. All materials outlined in this Division shall be manufactured in the United States or be otherwise approved by the City Engineer.

13.01.02 Scope

The Contractor shall, unless otherwise noted, furnish all materials, equipment, tools and labor necessary to accomplish the work required under this contract in a safe and reliable manner, and all contract items are to be placed in proper operating conditions in full conformity with the contract and proposal, detail drawings, specifications, engineering data, instructions, and recommendations of the equipment manufacturer and materials as approved by the engineer.

13.01.03 Location

The location, grade and the approximate depth of the proposed watermain is shown on the plans with line and grade to be provided by the City of Muskegon unless otherwise noted. The Engineer reserves the right to make minor changes in alignment, grade and location of appurtenances, when such changes deemed necessary or advantageous. Major changes will be accomplished as described in Part 3, Section 1 Item 39 page 45 of the City of Muskegon Standard Contract.

13.01.04 Clean-Up

Surplus materials and appurtenances furnished by the City shall be delivered by the Contractor to the Public Service Building. Confirmation and/or receipts should be obtained from the Stockroom Manager and reported to the Project Inspector. All other surplus construction material shall be removed from the site by the Contractor. Trench backfill and surface replacement shall follow pipe laying operations so that the extent of open trench shall not exceed 500 feet, unless specific authorization is obtained from the Engineer. The finished site shall be free of debris and neat appearance.

13.01.05 Contractors “Notice to Proceed”

After receiving the “Notice to Proceed” the contractor shall give the City Engineer a minimum of 48 hours notice of start to allow for survey layout and assignment of inspection personnel. Whenever work is to be done by City forces or co-ordination with City forces, the contractor shall provide a minimum of 48 hours advance notice to the department from which the work is requested.

13.02 MATERIALS

13.02.01 General

All materials furnished by the Contractor must conform in all respects to the following standards. (Where reference specifications are used, they shall be considered as referring to the latest revised issue).

The Contractor shall be responsible for all material furnished and shall replace, at his own expense, all such material found defective during the life of the contract. For material furnished by the City of Muskegon, the Contractor shall become responsible from the time of delivery, and shall reject any defective materials within three calendar days of delivery, and such materials shall be replaced by the City. Any defective material furnished by the City and installed by the Contractor without discovery of such defect will, if found defective prior to final acceptance, be replaced with sound material by the owner. The Contractor, however, shall at his own expense, furnish all labor, equipment and supplies necessary to facilitate the above replacement.

The Contractor shall furnish to the Engineer a manufacturer's certification that all materials meet minimum requirements as detailed in the material specifications references (refer to paragraph 13.02.02). The Contractor's unit prices will be assumed to include an allowance for this responsibility.

All pipe and related items shall be stored as recommended by the manufacturer, on suitable timber skids free from contact with the ground. Gaskets shall be stored in as cool, clean and shaded a place as practicable.

Unloading shall be made so as to avoid damage to the castings or pipe. Under no circumstances shall materials be dropped. All special handling equipment and temporary supports shall be furnished by the Contractor.

No damaged or broken pipe shall be used, no damaged or broken cement lining in pipe or fittings shall be used, In the event coatings are damaged, the damaged area shall be recoated with an approved coating, at the Contractors expense, in a manner approved by the Engineer.

The watermain pipe shall be handled by means of slings. No hooks or loader forks shall be permitted to come in contact with joint rings or be inserted in the ends of the pipe and fittings for any reason.

Any material found defective or flawed during the progress of work will be rejected and removed from the site. No attempt will be made to repair defective materials without written consent of the Engineer.

13.02.02 Watermain Specification Reference

(a) Ductile Iron, Push-On Joint Pipe, 3”– 64” ANSI/AWWA C151/A21.51-09

(b) Push-On Joint Detail, ANSI / AWWA C111 / A21.11-12

(c) Ductile Iron, Mechanical Joint Pipe, 3”– 24” ANSI/AWWA C151/A21.51-09

(d) Mechanical Joint Detail, ANSI / AWWA C111 / A21.11-12

(e) Cement Lining, ANSI / AWWA C104 / A21.4-13 (Standard Thickness)

(f) Ductile Iron Pipe Wall Thickness Determination, ANSI/AWWA C150/ A21.50-14

(g) Ductile Iron, Flanged Joint Pipe, 3”– 64” ANSI/AWWA C111/A21.11-12 and ANSI/AWWA C151/A21.51-09

(h) Mechanical Joint Fittings, ANSI / AWWA C153 / A21.53-11 and ANSI/ AWWA C111/A21.11-12

(i) Push-On Joint Fittings, ANSI / AWWA C110 / A21.10-12 and ANSI/ AWWA C111/A21.11-12

(j) Flanged Fittings, ANSI/AWWA C110/A21.10-12

(k) Flanges, ASA-B16.1 Standard Class 125

(l) Copper Pipe, ASTM Spec B88-55 “Type K”

(m) Retainer Glands EBAA MEGALUG 1100 Series or Equal

(n) Fire Hydrants, ANSI/AWWA C502-14

13.02.03 Provisions for Electrical Thawing

(a) Serrated Silicon Bronze Wedges

Two per joint for 3” through 12” pipe, four for larger pipe. Each wedge is to be driven into the opening between the plain end and the bell until snug. When four wedges are used, they are inserted side by side, in pairs. Wedges can be used with push-on joints only.

(b) Copper Cable Bond Conductor

Installation of copper cable bond conductor across the joints of push-on and mechanical joint pipe and fittings. The copper cable shall be a minimum AGW size #4 copper cable, The copper cable shall be welded to the pipe on push-on joints and have cable ends that fit standard watermain bolts for mechanical joints. The copper cable shall be of sufficient flexibility to withstand ground and pipe movement after installation.

(c) Copper Strap Bond Conductor

Installation of copper strap bond conductor across the joints of push-on joint pipe. The copper jumper strips shall be 1/16" x 3.4", 48 ounce soft copper, bolts shall be 5/16" x ¾" silicon bronze hex head bolt and nut. The copper strap shall be welded to the pipe and be of sufficient flexibility to withstand ground and pipe movement after installation.

(d) Conductive Push-On Gaskets

These gaskets may be used in lieu of wedges, cable or strap bond conductors. Metal contact strips which are molded or inserted into the gasket must insure positive electrical contact between pipes. A thorough cleaning of gasket seating surface should be preformed prior to assembly.

(e) Payment

The payment for provisions for electrical thawing shall be included in the cost of the new watermain. No other payment shall be made.

13.02.04 Fire Hydrant

A 5 ¼" M.V.O. East Jordan (5BR 250) hydrant shall be furnished and installed in the locations shown on the drawings and should be placed in a plumbed vertical position. Hydrants shall be of the non-compression type, and shall conform to ANSI / AWWA C502-14 as last adopted, and any Underwriter Laboratories requirements. Hydrants shall have two 2-1/2" hose connections and one 5" "STORZ" fitting; their barrels shall be 8-1/2 inches in diameter (minimum) with 5-14" valve openings and shall open to the left utilizing a 1" nut (measured flat to flat). All hydrants shall be painted red. Threaded connections shall conform to the City of Muskegon Standard Big Six (six threads per inch). Hydrant inlets shall have 6" diameter mechanical joint connections unless otherwise specified on the plans or in the special provisions. The hydrant assembly shall have all mechanical joints restrained with ductile iron MEGALUG glands. The hydrant shall be so designed so that the direction of the nozzles can be reoriented without digging up the assembly, and so that height extensions may be added at a later date. Hydrants shall have bronze interior parts including operating stems. Bronze to bronze

main valve seats shall be required if seat removal is necessary for removing the valve assembly. All hydrants shall have a minimum bury of 6-1/2 feet. If the operating screw is located on the top it shall be bronze. Hydrants shall come with duel drain outlets conforming to AWWA C502-14, Section 4.8.2. When hydrants are installed below the water table, or in soils that are not permeable, the brass drain hole bushing shall be removed and a threaded brass plug inserted into the drain hole (weep hole) as directed by the engineer.

13.02.05 Gate Valves

All valves shall be iron body, bronze mounted, double disc. Parallel seat or compression resilient seated, with a 2" operating nut open to the right, with the direction indicated by an arrow cast on to the valve or the operating nut. Generally, end connectors shall be mechanical joint for all exterior ground-buried valves, unless otherwise specified. All valves shall have bronze stem, o-ring stem seal, non-rising stem, the stem shall have continuity with the body, and shall have a clean waterway equivalent in area, when open, equal to that of the connecting pipe. All valves shall be of new construction and complete with operating equipment and other appurtenances necessary for operation. All valves shall be designed to maintain a minimum 150 pound working pressure, tested at 300 pounds for sizes 14" through 48" or minimum 200 pound working pressure and tested at 400 pounds for sizes 2" through 12" and manufactured as per ANSI / AWWA C500 and C509. The valves shall be shipped as fully assembled as practicable. The exposed flanges and mounting pads shall be protected by wooden pieces bolted to them. All necessary skids and lifting devices shall be provided. Non-attached items shall be packed in boxes and properly labeled for assembly. The contractor may be required to furnish the services of a competent factory-trained serviceman to check final installation and supervise original start-up and operation of the equipment specified. Such services shall be included in the cost of the valve.

13.02.06 Butterfly Valves

Butterfly valves shall be manufactured to conform in all respects to the latest revisions of ANSI / AWWA, designation C-504, and coated inside and outside with standard bitumastic coating for water mains. The body, disc, shaft, seats, bearings and operators shall be designed based on Class 150B and may be the short or long body type. All butterfly valves shall have a working pressure of 150 psi, hydrostatically tested at 300 psi, and bubble-tight tested at 150 psi. The seat-ring shall be made of rubber body or disc mounted, and shall be adjustable and field replaceable in sizes 16" and larger. The shaft may be of the through type or stub type and shall be marked on the end to indicate the position of the valve disc with respect to the shaft and the shaft shall have continuity with the body. The shaft seals shall be of the "split-V" or "Chevron" type. The valve disc shall be of corrosion-resistant alloy cast iron. The valve disc shall be offset so as to prevent valve flutter in the full open position. The valves shall be equipped with a stainless steel stop in the operator to prevent the disk from rotating through the closed position. The

valve operator shall be permanently lubricated and sealed for buried service and shall be equipped with a two-inch square operating nut. The operator shall be constructed such that the valve will open when the nut is turned to the right or in a clockwise direction, with the direction indicated by an arrow cast onto the operating nut. Operators for valves 16" and 20" in size may be of the traveling-nut or worn gear type. Operators for 24" and larger shall be of the worn gear type. Generally, end connectors shall be mechanical joint, unless otherwise specified. All valves shall be of new construction and be complete with all operating equipment and other appurtenances necessary for operation. The contractor may be required to furnish the services of a competent factory-trained serviceman to check final installation and supervise original start-up and operation of the equipment specified. Such services shall be included in the cost of the valve.

13.02.07 Tapping Sleeve and Valve

Tapping Sleeves shall be full stainless steel sleeve as manufactured by Romac Style SST or approved equal, meeting the requirements of ANSI B16.1 Class 125 and in accordance with MSS-SP60, the sleeve will be required when tapping into existing watermains. The valve shall conform to City of Muskegon Standard Specifications 13.02.05. The joint between the sleeve and valve will be flanged. The Contractor shall present for approval detailed shop drawings of the assembly. Payment shall be at the unit price as described in the proposal and shall represent payment in full for the sleeve, valve and box completely installed.

13.02.08 Valve Boxes

Valve boxes shall be of ductile cast iron, adjustable, and furnished complete including cover, top section, center section and base. Valve boxes shall be not less than five inches in diameter with a minimum adjustment of 24 inches above and below proposed grade. The covers shall have the appropriate name cast on it ("WATER"). All parts of valve boxes, base and covers shall be coated by dipping in hot bituminous varnish. The valve box shall be placed centered on the valve nut and be placed in a plum vertical position. Payment for the materials and labor to install this item shall be included in the cost of the valve, unless otherwise specified.

13.02.09 Adjusting Water Valve Boxes

The water box materials shall be placed centered on the valve nut and be placed in a plumb vertical position. Pavement placement shall be the same as for adjusting manholes, (Section 14.04) unless otherwise specified. No payment will be allowed for adjusting water valve boxes either existing or new unless stipulated in the proposal.

13.02.10 Fitting Restraints

All plugs, caps, tees and bends which deflect 11-1/4 degrees or more, shall be provided with suitable restraints to prevent movement, in a manner acceptable to the Engineer. The restraint shall be applied to joints in each direction from the fitting according to the pipe restraint schedule or as shown on the construction plans in order to resist the thrust of the test pressure. Details of all restraints, unless specified, are to be submitted to the Engineer for approval. All joint restraints shall be considered incidental to this section of work, and included in the cost of the fitting. When specified as being necessary MEGALUG retainer glands shall be used for all ductile iron mechanical joint pipe and fittings through 24" and fast-grip gaskets for push-on pipe. For sizes larger than those maximums, self-restraining joints such as Superlock, or Lockfast pipe shall be used, or as specified by the Engineer.

13.02.11 Retainer Glands

Retainer Glands shall conform to 2.04.05 specification for watermain joints. Payment for this item shall be included with the new pipe and fittings. No additional payment will be allowed.

13.02.12 Flanged Joints

Where specified. Flanged joints shall be drilled using the Standard 125 pound Template.

13.02.13 Plugs and Caps

The caps (Tyler 5-155, or approved equal) plugs (Tyler 5-152, or approved equal) shall be ductile cast iron, and be 2" taped with plug. Payment for caps and plugs in place shall be bid price as found in the proposal, or otherwise specified. No payment will be made for temporary caps and plugs used for testing purposes.

13.03 CONSTRUCTION METHODS

13.03.01 General Excavation

On any contract where the Engineer will supply grades, the Contractor will notify the Engineer at least 48 hours in advance. The trench shall be excavated true to line and grade and shall be of sufficient width to provide adequate working space for making joints, compacting back fill, sheeting, pumping and of sufficient depth so that the top of pipe will have a minimum cover of 5-1/2 feet as measured from the established or proposed gutter grade, or as measured from the proposed or existing ground elevation (six feet from the top of curb).

The Contractor shall take adequate precautions to protect all grade stakes. The Contractor shall be responsible for the cost of replacement of stakes which are damaged or lost through his negligence.

There shall be a minimum of six inches of clearance on each side of the barrel of the pipe and a maximum width of the trench at the level of the top of the pipe of not more than a distance equal to the O.D. of the pipe plus 24 inches. On paved streets, the pavement shall be cut by means of concrete saws to a neat and straight line along the top edge of the intended trench opening, and all sawing shall be included in the cost of trench repair.

All material in excess of that needed or which is unusable shall be disposed of at such locations as the Engineer may direct. If the disposal site has been specified in the special provisions, the cost of disposal shall be included in the lineal foot cost of the pipe. If no disposal site has been specified, all excess material becomes the property of the Contractor.

The Contractor shall call Miss Dig 3 working days (Excluding Sat. Sun. and Holidays) before digging (1-800-482-7171) for the location of existing under ground systems. The Contractor is liable for all damages to existing under ground systems.

13.03.02 Sheeting and Bracing

When the depth of the trench or soil conditions require, or to prevent damage to adjacent structures and property, or to protect workmen, the sides of the trench shall be sheeted, shored and braced adequately to prevent sliding or caving. All underground utilities crossing the trench or running parallel to the proposed pipe, shall be supported and braced in an approved manner. All materials and labor for sheeting, shoring and/or bracing shall be furnished by the Contractor and will be considered incidental to the work. The Contractor is fully responsible for the sufficiency of such supports and for the integrity of his work. In the removing of the sheeting or bracing, special care shall be taken to prevent any caving of the sides of the excavation and to prevent damage to the completed work or to adjacent property, and to prevent loss of density in the pipe bedding material.

13.03.03 Obstructions

Wherever obstructions, not shown on the plans, are encountered and interfere to such an extent that an alteration to the plan is required, the Engineer shall be notified at once and shall make such changes in the plans as he deems necessary. If such a change results in a significant increase in the amount of work required of the Contractor, such a change shall be paid by

change order to the contract, only to the extent that his change in work is not covered by contract unit prices.

13.03.04 Deflections

Deflections for obstructions or other purposes shall be governed by these allowable limits in the table presented below, unless further deflection is allowed by written communication from the Engineer.

DEFLECTION TABLE

Unrestrained Connections only

Pipe Size	Deflection in inches Per 20 foot length
3	27”
4	27”
6	22”
8	17”
10	17”
12	17”
14	11”
16	11”
18	9”
20	9”
24	7”

13.03.05 Laying Condition

Laying Conditions Unless Specified Otherwise, Shall conform to the most Current Michigan Department of Transportation Standard Specifications for Construction, Standard Plan for Utility Trenches, R-83-C, or subsequent revision thereof for the trench detail specified.

13.03.06 Unsuitable Conditions

Where unstable soil is encountered at pipe grade, Trench undercut and backfill will be done and Unless Specified Otherwise, Shall conform to the most Current Michigan Department of Transportation Standard Specifications or subsequent revision thereof.

13.03.07 Pipe Care

Care shall be taken to keep the interior of the pipe clean and free from dirt and other foreign materials. Bulkheads shall be used at open ends of the pipe to insure cleanliness, especially at the end of each day’s work. If there is water in the trench, a water-tight plug will be utilized, and the seal must remain in place until the trench is pumped completely dry. The end shall also

be plugged whenever the pipe is left unattended. The pipe shall be laid with the bell ends facing in the direction of laying, unless otherwise directed by the Engineer.

13.03.08 Dewatering

When dewatering is encountered, Unless Specified Otherwise, Shall conform to the most Current Michigan Department of Transportation Standard Specifications or subsequent revision thereof.

13.03.09 Push-On Joint Assembly

It is essential that the gasket groove be clean and free of foreign matter prior to lubrication and gasket installation. Wire brushing, wiping or flushing may be required. The cleaned gasket groove shall be lubricated to make gasket installation easier and to assist in proper positioning of the gasket. The gasket must be correctly positioned within the groove. Check with fingers to be sure of correct placement. Lubricate the gasket over its entire inner surface; as well as to the bevel of the plain end. The joint should be assembled with both pipes reasonably straight alignment. Any deflection should be made after the joint is assembled. On any field cut pipe, the outside edge must be beveled and smoothed as any sharp corner may cause gasket damage. Straight alignment is especially important when assembling field cut pipe. Field inspection by the Engineer must be accomplished before a field cut pipe may be joined. During cold weather installations, keep gaskets warm prior to placement within the bell, to reduce their stiffness.

13.03.10 Mechanical Joint Assembly

The inside of the bell and the plain end of the pipe must be thoroughly cleaned of foreign matter and wire brushed if necessary. All surfaces and gaskets should be brushed over with soapy water. A rubbed gasket and follower gland should be placed on the plain end “seated” in the mechanical flanged bell; and then the gasket firmly and evenly pressed into the bell. After the gland is in position for bolting, insert all bolts and make all nuts finger-tight. Keeping the plain end centrally located within the bell, begin tightening bolts, bringing all bolts up evenly at all points around the bell flange. Alternate bolts from side to side until all bolts are uniformly tight within the correct range of torque of 75 to 90 foot pounds (4” thru 24” sizes). If effective sealing is not attained at the maximum torque level, the joint should be disassembled and reassembled after thorough cleaning. Megalug style retainer glands shall be used on all mechanical joints, after all gland bolts are tight, bring all retainer bolts hp evenly around the pipe, tighten all retainer bolts by alternating tightening on opposite sides of the pipe until the twist-off nuts snap off.

13.03.11 Existing Water Main Connections

Existing water main connections may be oversized. The Contractor shall confirm the size of the existing water main prior to the connections. No additional payment shall be made if over sized fittings are required.

13.03.12 Cut and Cap __ Inch Watermain

The existing __ inch watermain as shown on the construction plans, shall be cut and capped with a ductile iron, mechanical joint cap and restrained with retaining glands. The existing watermain will be thrust blocked in a manner to prevent movement of the existing watermain. Engineer will determine if the contractor's method of thrust blocking is acceptable

The completed work, Cut and Cap, __ inch Watermain as shown on the construction plans and in the proposal, shall including all materials, labor and equipment, as measured and will be paid for at the contract unit price for Cut and Cap, __ inch Watermain. No other payment will be allowed.

13.03.13 Compaction Tests

All soil compaction tests shall be preformed by the City with full cooperation and labor and equipment assistance from the contractor. The Contractor shall be allowed one re-test. All costs for any additional testing due to failure of the Contractor to meet density requirements shall be borne by the Contractor. These costs shall include all labor and equipment and supervision needed to re-test failed areas.

13.03.14 Field Cutting Pipe

The spigot ends of pipe which have been field cut, shall be ground to a smooth surface and painted with two coats of asphaltum metal protective paint.

13.04 WATER SERVICES

13.04.01 Definition

As used herein, water services shall be considered to include all pipe, corporation cocks, curb stops, curb boxes and all necessary appurtenances to transport water from the watermain to private property. For larger services requiring valves instead of corporation cocks, specifications will be covered in the Special Provisions.

13.04.02 Scope

The Contractor shall, unless otherwise noted, furnish all materials, equipment, tools and labor necessary to accomplish the installation of all water services at the locations shown on the plans or as located by the Engineer. The Contractor shall conduct his work as to minimize traffic interruptions.

13.04.03 Corporation Cocks

The unit price of this item shall include all labor and materials for tapping the existing watermain and installing the corporation cocks, utilizing a Mueller # P25008, Ford # FB1000-X pack joint or approved equal. On services 1 ¼" to 2" a ductile cast iron saddle Ford # FS101 or approved equal shall be used and will be included with the corporation cock payment. Payment will be for installation complete.

13.04.04 Water Service Line

The unit price of this item shall include all labor and materials for laying copper service pipe, type K, at the location specified and of the size indicated on the plans; in the proposal, or as specified by the Engineer. The service shall be connected to the corporation cock and "goose-necked" for expansion purposes, with a minimum of 5 ½ feet of bury below the proposed grade. Payment for water service shall be by the lineal foot as measured horizontally from the centerline of the main to the centerline of the curb stop or meter pit and from the centerline of the curb stop to the connection point of the existing water service, from the connection point of the meter pit to the connection point of the existing water service shall be lineal foot of pipe used, the connection fitting shall be included in the new water service line and shall have continuity between the old and new service.

13.04.05 Curb Stop and Box

The unit price of this item shall include all labor and materials to install a working and useable curb stop and box., utilizing a Mueller # P25155, Ford # B44-444M pack joint or approved equal with 2 inch Minneapolis thread, bushed for 1 ½ inches. Connections shall be copper pipe to copper pipe. Payment will be for installation complete.

13.04.06 Meter Pit

The unit price of this item shall include all labor and materials to install a working and useable meter pit, utilizing a Ford # W3-T Cover with Locking lid, Ford # AV94-324W pack joint Angle Yoke Key Valve, Ford # L94-24D pack joint Yoke Ell, Ford # EC-23 Expansion Connection, Ford # Y503 Series Yoke Bar, Sono-Loc 20 inch diameter 36 inch high Meter Box, or approved equal on all items, the City of Muskegon will provide the meter. The Contractor will install to finish grade at locations specified on the plans; in the proposal, or as specified by the Engineer. Payment will be for installation complete.

13.05 HYDROSTATIC TESTS

Connecting to Existing Water Mains Prior to Pressure Testing Will Not Be Allowed. Preliminary testing of mains shall be done by the Contractor to ascertain if there are any major leaks. Final pressure tests shall be made in presence of the Engineer, who shall receive 24 hours notice prior to testing. The Contractor shall pressure test each 5000 foot section of water main as it is constructed or as directed by the Engineer. Pressure testing of each 5000 foot section shall be made in increments of 1500 feet or less.

Before applying the specified test pressure, all air shall be expelled from the pipe. If hydrants for blow off are not available at high points, the Contractor shall make the necessary taps to release the air and insert plugs after the test has been completed, or install corporation cocks and leave them in place after testing. The Engineer shall notify the Municipal Water Department prior to making connections to any existing watermains, filling of mains with water and flushing of any watermains. Reasonable use of water from City mains for purposes of testing will be available at no cost to the Contractor.

The Contractor shall furnish proper appliances and facilities for testing and draining the main without injury to the work and surrounding territory. The Contractor shall test by filling the main with clean water under minimum hydrostatic pressure of 150 lbs per square inch. In no case shall the leakage in any stretch of pipe being tested exceed the following amounts in a 2-hour period: All pipe installed on the project shall be tested in accordance with the requirements of ANSI / AWWA C600-10.

$$L = \frac{SD\sqrt{P}}{148{,}000}$$

Where;
L = testing allowance (makeup water), in gallons per hour
S = Length of Pipe tested, in feet
D = Nominal Diameter of Pipe Tested, in Inches
P = Average Test Pressure during the hydrostatic test, in pounds per square inch (gauge)

For 6” pipe – 1.00 gallons per 1000 lineal feet per two hour period
For 8” pipe – 1.32 gallons per 1000 lineal feet per two hour period
For 10” pipe – 1.66 gallons per 1000 lineal feet per two hour period
For 12” pipe – 1.98 gallons per 1000 lineal feet per two hour period
For 14” pipe – 2.32 gallons per 1000 lineal feet per two hour period
For 16” pipe – 2.64 gallons per 1000 lineal feet per two hour period
For 18” pipe – 2.98 gallons per 1000 lineal feet per two hour period
For 20” pipe – 3.32 gallons per 1000 lineal feet per two hour period
For 24” pipe – 3.98 gallons per 1000 lineal feet per two hour period
For 30” pipe – 4.96 gallons per 1000 lineal feet per two hour period
For 36” pipe – 5.96 gallons per 1000 lineal feet per two hour period

In the event that a leak is detected and located, the Contractor shall review the method of repair with the engineer for concurrence before proceeding with the repair. After repairs are made the main will be retested. The Contractor shall notify the Engineer of his intent to retest at least 24 hours in advance. However, the Contractor shall not begin the retest until all attempts have been made to correct all defects, and approval for retesting has been given by the Engineer.

The City shall be responsible for all inspection costs for the first two hydrostatic tests of any section. If a section requires a third hydrostatic retest, the Contractor may be held liable for such inspection costs incurred by the City of Muskegon personnel.

13.06 ELECTRICAL CONDUCTIVITY

All ductile iron pipe and fittings furnished and installed under this contract shall be provided with electrical conductivity connections. Electrical conductivity connections shall be brass wedges, copper cable bond, copper strap bond, conductive push-on gaskets and megalug retainer glands as specified. After installation of the mains, backfilling and the hydrostatic pressure tests are completed, the system (pipe line and hydrants) shall be tested for electrical continuity and current capacity. It is imperative that all lines and appurtenances be filled with water prior to conductivity testing. The line will be tested in sections between hydrants and or stand pipes. The hydrants and hydrant valves will be opened to bleed off any air in the lead. The hydrant will then be closed and the hydrant valve left open. Adjacent hydrants or stand pipes will serve as test section termini. The Contractor will provide electric current of 100 to 150 amperes for the test. Direct current of 150 amperes, shall be passed through the pipe line for a period of five

minutes. Current flow through the pipe shall be measured continuously on a suitable ammeter and shall remain steady without interruption or excessive fluctuation throughout the five minute test. Insufficient current or intermit ten current or arcing, indicated by large fluctuations of the ammeter needle, shall be evidence of defective electrical contact in the pipe line. The cause shall be isolated and corrected. Thereafter, the section in which the defective test occurred shall be retested as a unit and shall meet the test requirements to the satisfaction of the Engineer. All electrical connections shall be capable of carrying 60 amps. Any pipe cut and repaired with couplings shall have electrical connections. In addition to the above work the Contractor at the time the joint is made shall test each joint for contact effectiveness. The payment for electrical conductivity shall be included in the cost of the new watermain. No other payment shall be made.

13.07 Tapping Existing Water Mains 4 Inch and Larger

All work relative to tapping existing watermains shall be under the supervision of the Water Department Superintendent. The Contractor, after proper notice and coordination, shall have at the site adequate personnel, equipment and materials to properly install the tapping sleeve and valve. The existing watermain shall be exposed and the pipe cleaned to accept the tapping sleeve. The sleeve shall then be installed and valve attached. The Contractor shall then perform the pressure test at (150#) for five (5) minutes in the presence of the project Inspector. After testing, personnel from the Water Department will make the tap using City equipment. The Contractor will assist as necessary. No charges shall be made to the Contractor by the City for such described work.

13.08 Permeation

Every effort will be made to identify any contaminated areas before any work proceeds, but should the contractor encounter any contaminated area, work shall cease and the specialized gaskets for use in contaminated areas will be used. Refer to AWWA C600 section 4.1 (**Permeation**), for instructions about how to proceed in contaminated work areas.

.

13.09 CLEANING AND DISINFECTING

13.09.01 Flushing

After the hydrostatic tests have been satisfactorily completed, the pipe lines shall be cleaned and flushed by introducing water from the city water-mains into the completed line and the water allowed to flow from the far end of the section and flushed until it runs clear. Before the main is chlorinated, it shall be flushed with potable water to remove air pockets and particulates.

The flushing velocity in the main shall not be less than 3.0 ft/sec in accordance with AWWA C651-14, Section 4.4.2. Each section tested shall be flushed separately. All disinfecting shall be done in accordance with AWWA Standard C651-14.

13.09.02 Disinfecting

Disinfect the pipe lines with chlorine. The preferable point of application of the chlorinating agent is at the beginning of the new pipe line, or any valve section of it, and through the stand pipe or a corporation cock inserted in the horizontal axis of the newly laid pipe. Water from existing watermains should be controlled to flow very slowly into the newly laid pipe during application of chlorine. Partially open the end-most hydrant or valve on the section of pipe line under treatment to permit the flow of water through the pipe line. Continue treatment until the water flowing from the far end of the main contains a chlorine residual of at least 25 parts per million. Stop the flow of water and chlorine by closing appropriate openings. (See Sections 13.09.05 and 13.09.06 for information on chlorine products and methods of application) A field test shall be done for determining that the proper amount of chlorine residual is in the new pipe line, the test shall be done by the Contractor with testing equipment approved by the Engineer.

13.09.03 Disinfecting Duration

Permit the treated water to remain in the pipe line for at least 24 hours, after which, there should be a free chlorine residual of not less than 10 ppm. A field test shall be done for determining that the proper amount of chlorine residual is in the new pipe line, the test shall be done by the contractor with testing equipment approved by the Engineer. The main shall then be thoroughly flushed until all of the heavily chlorinated water is removed to the point of a residual chlorine content not to exceed 2 ppm, or a residual acceptable to the City of Muskegon Department of Public Works. The Contractor will test the water to see that this has been accomplished. (See AWWA C651-14, Section 4.9)

13.09.04 Sampling

The Engineer will schedule with the water filtration plant for sample pick-ups. (First sample pick-ups shall be done Monday through Thursday, no first sampling will be done Friday through Sunday) An initial set of samples will be taken after 16 hours without any water use. Then collect, using the sampling site procedures outlined and without flushing the main, two sets of samples a minimum of 15 min apart while the sampling taps are left running. Both sets of samples must pass for the main to be approved for release. A 48 hour test is required for each sample. If the results of the samples are unsafe, a repeat of the chlorine treatment and sampling is necessary. A set of samples includes all samples collected along the length of the pipeline. For new mains, sets of samples shall be collected every 1200 feet of the new

watermain, plus one set from the end of the line, and at least one from each branch greater than one pipe length. Sampling should never be collected from hoses or fire hydrants. Sampling shall be from stand pipes or a corporation tap with a copper pipe extension. Sampling points shall have a valve and a copper gooseneck assembly. Cost of collecting samples and laboratory analysis shall be paid for by the City of Muskegon, up to a maximum of two tests per section. Any additional testing will be at the Contractors expense. All materials, labor, equipment and tools for conducting the cleaning and disinfecting treatment shall be furnished by
the Contractor without cost to the City. All sampling shall be done in accordance with AWWA C651-14, section 5.1, Bacteriological Tests.

13.09.05 Chlorine Products

Chlorine products for disinfecting watermains are available in several forms. Refer to AWWA C651-14, Sec. 4.1 for the forms of chlorine which may be used in the watermain disinfection operation, and the proper methods of handling and feeding different types of chlorine into the watermain. The most convenient forms are as follows:

A. Liquid Chlorine (gas) conforming to ANSI/AWWA B301 contains 100 percent available chlorine and is packaged in steel containers usually of 100-lb, 150-lb, or 1-ton net chlorine weight. The pressure of the chlorine in the cylinder varies with the outside temperature and will usually be found to vary between 40 and 140 lbs. per square inch.

B. Calcium hypochlorite conforming to ANSI/AWWA B300 is available in granular form or in 5-g tablets and must contain approximately 65 percent chlorine by weight. The material should be stored in a cool, dry, and dark place to minimize its deterioration.

CAUTION: Tablets dissolve in approximately 7 hr and must be given adequate contact time. Do not use calcium hypochlorite intended for swimming pool disinfection, as this material has been sequestered and is extremely difficult to eliminate from the pipe after the desired contact time has been achieved.

13.09.06 Calcium hypochlorite Application

A solution of water and approved chlorine should be applied to watermains by means of solution feed chlorinating device with a power operated booster pump. High test calcium hypochlorite must be prepared as a water mixture for introduction into the watermains. The powder should be made into a paste and then thinned to about a 1% chlorine solution (10,000 parts per million). The preparation of a 1% chlorine solution requires the following proportions of powder to water.

Product	Amount of Compound	Gals. Of Water
High test calcium Hypochlorite 65% to 70%	1 lb	8.0

Prepare the 1% chlorine solution in a container and permit solids to settle. Apply the clear supernatant solution to the main by pumping through a power operated chemical feeder. The following table indicates the amount of chlorine required for each one hundred feet of various pipes.

Size of Pipe	Vol. gals. In 100 ft. pipe	Amounts of chlorine or chlorine solution per 100 ft of main for 25 p.p.m.	
		Chlorine 100%	**1% Chlorine Water Solution**
4”	65.3	.013 lbs.	.16 gal.
6”	146.9	.030 lbs.	.36 gal.
8”	261.1	.054 lbs.	.65 gal.
10”	408.0	.085 lbs.	1.02gal.
12”	587.5	.120 lbs.	1.44 gal.
16”	1044.5	.217 lbs.	2.60 gal.

13.10 METHOD OF MEASUREMEMT AND PAYMENT

13.10.01 Watermain Pipe

Watermain Pipe shall be measured by lineal feet of pipe in place, including the lengths of fittings and valves, as measured along the center line of the pipe. At hydrant leads, watermain pipe shall be measured by lineal foot from the centerline of the main to the centerline of the hydrant including fittings and valves.

13.10.02 Valves and Fittings

Valves and Fittings shall be paid for as “each”, and the unit price shall include the cost of all materials and accessories, testing installation, restraining devices and labor necessary for proper operation.

13.10.03 Restraining Devices

Restraining devices, thrust blocks, retainer glands, tie rods, etc., shall be incidental to the piping costs and the cost of which shall be included in the unit price for watermains and / or valves, fittings, etc.

13.10.04 Hydrants

Hydrants shall be paid for as “each”, and shall include all materials, accessories and labor to install this item in the proper manner. Hydrant valves shall be paid for separately as an “each” item but the cost of all the restraining devices is incidental and should be included in the cost of the pipe in place.

CITY OF MUSKEGON

OFFICE OF THE CITY ENGINEER

STANDARD CONSTRUCTION SPECIFICATIONS

DIVISION 14
MANHOLES & CATCH BASINS

Approved by the City Commission
February 09, 2010

DIVISION 14
MANHOLES & CATCH BASINS

DESCRIPTION - This work shall consist of placing pre-cast concrete structures at locations shown on the construction plans, and shall include excavation and backfilling.

MATERIALS - All Structures shall meet the requirements of Division 12, And Unless Specified Otherwise, Shall conform to the most Current Michigan Department of Transportation Standard Specifications for Construction or subsequent revision thereof.

CONSTRUCTION METHODS - Unless Specified Otherwise, All Construction Methods Shall conform to the most Current Michigan Department of Transportation Standard Specifications for Construction or subsequent revision thereof.

ADJUSTING & RECONSTRUCTING MANHOLES & CATCH BASINS - When called for on the plans, or so ordered, the Contractor shall remove as incidental the existing structure to what ever depth necessary to support the new work. The Authorized Representative or his Agent shall determine the depth of removal and type of materials required for the work. The existing brickwork shall then be washed thoroughly. The casting shall then be adjusted to grade with all masonry work and casting resting on a full 1/2 inch thick bed of regular cement mortar (3:1 mix). A mortar plaster coat 1/2 inch thick shall then be placed on the outside of the masonry work. The inside masonry work shall be smoothed and dressed to present a finished product. Wooden wedges or other organic material used for support are not acceptable. Payment for rebuilds shall be by the Vertical foot and shall be measured from the lowest elevation of the new work to the top 12 inches of masonry work. Payment for the top 12 inches of masonry work shall be paid as adjusting casting. All the above work shall be payment in full for removal and disposal of old material. In paved areas, where the casting has to be loosened, the Contractor shall remove the pavement around the casting. The opening shall be cut square, have vertical walls, be free of loose material and be graded to the proper depth (a minimum depth of 6" on Residential and 8" on Major Streets). After the casting is adjusted, the opening shall be filled with 9 sack concrete. After the concrete has set and prior to the top course, the contractor shall place Membrane Sealant material to span the joint where concrete abuts bituminous material. The Membrane Sealant material shall be placed in accordance with the manufactures application specifications. The concrete shall be left two (2) inches low at the casting, and shall meet the edge of the existing pavement leveling course. Payment for adjusting and reconstructing Manholes and Catch Basins shall be at the unit price described in the proposal and shall represent payment in full for all of the above work. Application of Membrane Sealant shall be included with the Adjusting Manhole and Catch Basin Castings. No payment shall be allowed for adjusting new structures.

MEMBRANE SEALNT

Description - The work shall consist of applying a self adhering membrane sealant around manhole castings and water valve boxes that have been adjusted with concrete.

Materials - The material shall conform to Division 2 Section 2.06.01of the Standard Specifications.

Construction Methods - Application of the material shall be after the adjustment of the casting and immediately prior to placing HMA top course. Application of the material shall be placed at a time when contact from vehicular traffic will be minimized. The membrane shall be applied per manufacturer’s specifications and shall be free of wrinkles

and folds. The material shall overlap the joint between the concrete used for adjustment and HMA leveling course a minimum of 6 inches.

Measurement and Payment - The completed work, Membrane Sealant, including all materials, labor and equipment will be included with the adjusting of manholes and water valves, no other payment will be made.

CLEANOUT - All Structures shall be kept thoroughly cleaned of all silt, debris and foreign matter and shall be free from such accumulations at the time of final acceptance.

BASIS OF PAYMENT - Payment shall be at the unit price described in the proposal and shall represent payment in full for all of the work for each unit complete.

CITY OF MUSKEGON

OFFICE OF THE CITY ENGINEER

STANDARD CONSTRUCTION SPECIFICATIONS

DIVISION 15
HOT MIX ASPHALT PAVEMENT

Approved by the City Commission
February 09, 2010

DIVISION 15
HOT MIX ASPHALT PAVEMENT

DESCRIPTION - This work shall consist of placing Hot Mix Asphalt consisting of two or more separate courses on a prepared surface at a rate shown on the plans or specified by the Engineer.

MATERIALS - All Material Unless Specified Otherwise, Shall conform to the most Current Michigan Department of Transportation Standard Specifications for Construction or subsequent revision thereof.

CONSTRUCTION METHODS - Unless Specified Otherwise, All Construction Methods Shall conform to the most Current Michigan Department of Transportation Standard Specifications for Construction or subsequent revision thereof.

ASPHALT PAVING - A self-propelled mechanical paver shall be used to place all leveling and top courses to such a depth that when compacted, it will have the thickness specified on the plans. Spreader boxes will not be allowed for these applications.

The Contractor is required to complete the top course application in one day unless given prior approval by the Engineer. If the Engineer grants permission for partial paving of the top course, the Contractor is required to traverse the same distance across all lanes to avoid a cold longitudinal joint.

ASPHALT QUANTITIES - In the event of poor grade control on any course of asphalt paving which results in a significant variance from planned quantity, and which is corrected by means of adjusting the thickness of a subsequent course, the material in excess of the verified planned quantity will be paid for as the material with the lowest bid price of those showing the discrepancy.

RANDOM WEIGHT CHECKS - On any material being paid for on the basis of weight the Engineer shall be allowed to randomly check trucks to verify the net weight of the material. The truck will be directed to a certified scale within the City of Muskegon for weighing before and after unloading. The random weight check will be considered incidental to the contract with no additional compensation allowed.

JOINTS IN ASPHALT PAVEMENTS - Without exception, and prior to the placement of adjacent asphalt mats, the vertical edges of the initial mat shall be coated with a asphalt bond coat.

SAND SEAL FOR ASPHALT JOINTS - The Contractor shall sand seal all feathered, sawed or butt joints that are produced during the top course placement. The joint shall be sealed with asphalt cement, Grade 85 - 100 penetration and broomed as necessary to entirely cover the joint. Clean 2NS Sand shall then be placed and spread upon the asphalt cement surface to prevent tracking. No payment will be allowed for Sand Seal placement.

NOTICE OF PAVING - The Contractor shall give the Engineer a minimum of 24 hours notice prior to paving so that an inspector can be assigned and no parking signs posted. If less than 24 hours notice is given and an inspector is not available the Contractor will not be authorized to proceed. In the event an inspector is available on less than 24 hour notice, the removal of any vehicles parked on the street shall be the responsibility of the Contractor.

It shall be the responsibility of the Contractor to notify the Police Department, Fire Department, and the Department of Public Works and Utilities before closing any street to traffic for construction.

BASIS OF PAYMENT - Hot Mix Asphalt will be paid for at the contract unit price per ton which price shall be payment in full for all preparation of foundation, furnishing the materials and constructing the work complete.

MEMBRANE REINFORCEMENT - Membrane Reinforcement shall be non-woven polypropylene fabric "Petromat" as manufactured by the Phillips Petroleum Company, or an approved equal. This material shall generally be installed in accordance with the manufacturer's recommendations. Membrane Reinforcement shall be placed after the bituminous leveling course is complete.

The asphaltic binder used for this project shall be Asphalt Cement, penetration grade 85-100. The asphaltic binder shall be applied at the rate of 0.25 gallons per square yard at 320 degrees Fahrenheit. Care shall be exercised so as to prevent the placement of excessive amounts of asphaltic binder. After the asphaltic binder has cured, the fabric shall be placed in the areas designated on the plans. The fabric shall be broomed to remove air bubbles and wrinkles and to insure complete contact with the road surface. Overlaps shall be four to six inches. Additional asphaltic binder shall be placed as directed by the Engineer.

Turning of machinery on the membrane shall be kept to a minimum in order to avoid damage to the fabric. A small quantity of sand or hot mix may be broadcast ahead of vehicles to prevent equipment tires from adhering to the membrane. Membrane Reinforcement shall be measured and paid for at the contract unit price per square yard. The unit price shall be payment in full for all labor, equipment and materials necessary to satisfy these specifications.

CITY OF MUSKEGON

OFFICE OF THE CITY ENGINEER

STANDARD CONSTRUCTION SPECIFICATIONS

DIVISION 16
MISCELLANEOUS

Approved by the City Commission
February 09, 2010

DIVISION 16
MISCELLANEOUS

CONTRACT COORDINATION - The Contractor may be required to coordinate this contract work with other projects which may be in progress at the same time.

No additional payment shall be allowed the Contractor because of any delay, inconvenience, or extra work caused by other contracts in the area.

GOVERNING ORDER - The Technical Specifications, which include the City of Muskegon Standard Specifications for construction and materials shall govern the construction of this project except as modified by these Special Specifications. Special attention is called to Page 40, Paragraph 34b, "Discrepancy", which defines the governing order of Specifications.

CITY'S RIGHT TO REDUCE OR INCREASE QUANTITIES - Reference is made to Part 3, Section I, Number 38 on Page 44 of the General Specifications which gives the City the right to increase or decrease the total contract price 25% without penalty.

CONSENT TO PROCEED - The Contractor shall obtain Consent to Proceed from the Engineer or Project Inspector before proceeding with construction of any of the following items:

1. Concrete Curb and Gutter
2. Trench Repair
3. Base Course
4. Leveling Course
5. Wearing Course
6. Concrete Pavement
7. Concrete Walk
8. Drive Approach

Consent to Proceed shall be issued upon confirmation that all necessary labor, equipment and material are on the site, and the area is properly prepared.

LETTERS OF RECOMMENDATION IN LIEU OF PERFORMANCE BOND - Four letters of sincere recommendation may be presented to the City Manager in lieu of a performance bond when this Contract is under the amount of $50,000 and the successful Bidder cannot produce the appropriate performance bond. To use letters of recommendation for this purpose, your intention to do so must be disclosed as part of your bid, so that a decision on acceptability can be made prior to the contract award.

SALVAGE MATERIALS - The Contractor shall become the owner of all salvaged cast iron, brass and lead products, including manhole and catch basin castings, goosenecks, stops, corporations, valve boxes, valves, and hydrants. Determination of the disposal site and disposal of the salvaged material is the responsibility of the Contractor. No payment shall be made for salvage disposal.

LIQUIDATED DAMAGES; TIME OF THE ESSENCE - The work is to be completed on the specified completion date, and completed, ready for final payment within 30 days after receiving the "Punch List".

Liquidated Damages. The parties recognize that time is of the essence of this agreement, and that the City will suffer financial loss and be entitled to damages in the event it is not completed within the time stated above, and further if partial performance is not completed within the times provided for partial performance, if a schedule is attached to this agreement or included herein. The parties also recognize the delays, expense, and difficulties involved in proving actual losses suffered by the CITY if the work is not completed on time. Accordingly, instead of requiring any such proof the CITY and the CONTRACTOR agree that as liquidated damages for delay, (but not as a penalty) the CONTRACTOR shall pay the CITY Three Hundred Dollars ($ 300) for each day that expires after the time specified for substantial completion set forth above, and the same amount for each day that expires after failure to complete partial performance if set forth in a schedule adopted in this contract. After substantial completion if the CONTRACTOR shall neglect, refuse, or fail to complete the remaining work within the time specified above for completion and readiness for final payment or any proper extension thereof granted by the CITY, the CONTRACTOR shall pay the CITY Three Hundred Dollars ($ 300) for each day that expires after the time above specified for completion and readiness for final payment.

Only delays caused by labor disputes, fire, natural catastrophe or acts of God shall excuse the CONTRACTOR from the above payments. When the effects of such interruptions have ceased, in the reasonable opinion of the CITY, the said time limits shall be adjusted only for the period of delay caused thereby, and shall remain in effect as adjusted.

The foregoing provisions for liquidated damages shall, however, be in addition to and not in substitution for any other rights or remedies which the CITY may have under this agreement or otherwise against the CONTRACTOR by reason of its failure to complete construction within the time and in the manner required by this agreement.

DEFECTIVE MATERIALS AND WORK -All materials which do not meet the requirements of the specifications at the times they are to be used shall be rejected, unless otherwise authorized as acceptable by the Engineer. Any completed work that may be found to be defective before the final acceptance of the completed work shall be corrected and replaced immediately in conformance with the Specifications. The Contractor shall be responsible for any and all damages that the work may sustain prior to its acceptance, and shall rebuild, repair, restore and make good at his own expense, all injuries and damages to any portion of the work by the action of the elements or from any cause whatsoever prior to its acceptance.

CORRECTING WORK - Any unfaithful work or imperfect work or material that may be discovered before the final acceptance of the work shall be corrected and replaced immediately on the order of the Engineer. In case any material is rejected, it shall be immediately removed from the line of work and not again brought thereon. In case the order for removal and replacing as specified above is not promptly complied with after written notice, the Engineer shall be at liberty to remove and replace the same with proper materials, at the expense of the Contractor, and the cost thereof shall be deducted from the amount due him. Any omission to disapprove the work or material at the time of inspection or at the time of any estimate, shall not relieve the Contractor of any of his obligations. All work or material of whatever kind which, during the progress of construction and before its final acceptance, may become damaged, shall be removed and replaced by the Contractor with good and satisfactory work and material.

RETENTION OF IMPERFECT WORK - If any portion of the work done or material furnished under this Contract shall prove defective and not in accordance with the Contract Documents, and if the imperfection in the same shall not be of sufficient magnitude or importance to make the work unacceptable or impracticable, or will not create conditions which are dangerous or undesirable, the Engineer shall have the right and authority to retain such work instead of requiring the imperfect work to be removed and reconstructed but he shall make deductions there for in the payments due the Contractor as may be just and reasonable.

ACCIDENT PREVENTION AND SAFETY - The Contractor shall comply with all Federal, State, and local laws and regulations governing the furnishing and use of all safeguards, safety devices, and protective equipment. He shall also take any other needed actions on his own responsibility or as directed by the Engineer as are reasonably necessary to protect the life and health of employees on the job, the safety of the public, and to protect property during the construction of the project. Recommendation of the current Manual of Accident Prevention in Construction, issued by the Associated General Contractors of America, Inc., shall be used for guidance in specific situations which are not covered by Federal, State, or local laws or regulations. Special provisions in polluted areas. The Contractor shall be responsible for determining whether work in all locations involved in this contract is subject to a governmentally required health and safety plan to protect workers and others from the effects of hazardous materials in proximity of the work, in the ground or water resources involved. In the event such a health and safety plan is required, the Contractor shall familiarize itself completely with the plan and comply with all its requirements. In the event there is no health and safety plan for hazardous materials, but the Contractor reasonably should recognize that a health and safety plan is warranted, it shall be the Contractor's responsibility to notify the city before commencing work to obtain or produce, as city may require, a health and safety plan and implement it.

CONFINED SPACES - The Contractor shall have a Confined Space Policy and shall use all safeguards, safety devices and protective equipment necessary to comply with the current Federal, State and Local laws and requirements for practices and procedures for protection from the hazards of entry into confined spaces. Also, the Contractor shall make available all necessary tools, equipment and/or man power for city personnel entering confined spaces to inspect the work performed or being performed by the Contractor. In the event Contractor determines that confined spaces exist in the project, it shall notify in writing, before commencing work, the location and existence of all confined places, providing sufficient documentation for city emergency personnel to respond to any and all situations requiring entry into or dealing with confined spaces.

SUNDAY & NIGHT WORK - Ordinarily, no Sunday or night work shall be carried on which will require the presence of the Engineer or an inspector, except with the written permission of the Engineer. Sunday and night work is permissible in an emergency to the extent required to meet the emergency, but the Contractor shall notify the Engineer, as far in advance as possible, of his intention to carry on such emergency work and of the time and place of doing it.

PUBLIC ACT NO. 57 OF 1998, SECTION 2:
A contract between a contractor and a governmental entity for an improvement that exceeds $75,000.00 shall contain all of the following provisions:

(a) That if a contractor discovers 1 or both of the following physical conditions of the surface or subsurface at the improvement site, before disturbing the physical condition, the contractor shall promptly notify the governmental entity of the physical condition in writing:

(i) A subsurface or a latent physical condition at the site if differing materially from those indicated in the improvement contract.

(ii) An unknown physical condition at the site is of an unusual nature differing materially from those ordinarily encountered and generally recognized as inhering in work of the character provided for in the improvement contract.

(b) That if the governmental entity receives a notice under subdivision (a), the governmental entity shall promptly investigate the physical condition.

(c) That if the governmental entity determines that the physical conditions do materially differ and will cause an increase or decrease in costs or additional time needed to perform the contract, the governmental entity's determination shall be made in writing and an equitable adjustment shall be made and the contract modified in writing accordingly.

(d) That the contractor cannot make a claim for additional costs or time because of a physical condition unless the contractor has complied with the notice requirements of subdivision (a). The governmental entity may extend the time required for notice under subdivision (a).

(e) That the contractor cannot make a claim for an adjustment under the contract after the contractor has received the final payment under the contract.

LOCAL PREFERENCE POLICY - To establish parameters in order for the City Commission to give local preference consideration for city contracts and purchase

The City Commission may give local preference on purchases and contracts to local businesses when the lowest local business bid/price is within 1% or less of the lowest non-local bid. In cases where the total cost is expected to exceed $1 million, the City Commission will be consulted on whether local preference may apply, prior to soliciting bids. Additionally, for the purposes of this policy, "local" shall mean a business location in the City of Muskegon.

TERRACE GRADING - This work shall consist of removing all delirious material, excavating 3 inches below finish grade and disposal of this material, and furnishing and placing of approved top soil. The top soil shall be struck off on a line between the top of curb and the outside edge of sidewalk, if no sidewalk exists, the grade line shall be as directed by the Engineer. Class A Seed, Fertilizer and Mulch as shown on the construction plans or in the special specifications shall be placed at the rate specified. Terrace grading will be paid for per lineal foot, measured along the center of the street and shall include all of the above work.

SODDING, SEEDING, TOP SOIL, FERTILIZER & MULCH

Description - This work shall consist of furnishing and placing Sod, Seed, Top Soil, Fertilizer and Mulch as shown on the construction plans or in the special specifications and shall be placed at the rate specified. Payment shall be at the unit price described in the proposal and shall represent payment in full for all of the work complete.

Materials - All Material, shown on the construction plans or in the proposal, Unless Specified Otherwise, Shall conform to the most Current Michigan Department of Transportation Standard Specifications for Construction or subsequent revision thereof.

Construction Methods - Unless Specified Otherwise, All Construction Methods Shall conform to the most Current Michigan Department of Transportation Standard Specifications for Construction or subsequent revision thereof.

Basis of Payment - Payment shall be at the unit price described in the proposal and shall represent payment in full for all of the work for each unit complete.

HYDROSEEDING - This work may be done in place of seeding and in accordance with the most Current Michigan Department of Transportation Standard Specifications for Construction or subsequent revision thereof.

The Contractor shall use care spraying around signs, drives, sidewalk, and personal property. Excess material shall be rinsed promptly from these areas with clear water. Application rates shall be the same as conventional methods: Class A seeding - 220# per acre, Hydromulch - per manufacturer, Adhesive - per manufacturer, Fertilizer - 228# per acre, and water as necessary.

Payment shall be at the unit price bid per square yard and shall include all of the above and other work needed to place the hydroseeding. No other payment will be allowed.

TRAFFIC CONTROL - Traffic Control shall be in accordance with the "Michigan Manual on Uniform Traffic Control Devices" and shall be the responsibility of the Contractor to provide, place and maintain signs, barricades and lights for the closing of the street as directed by the Engineer for the entire period of construction.

Type III barricades and signs shall be placed at all intersections leading to the construction site, as well as the site itself, in accordance with the plans for Traffic Control . The Contractor shall review barricade and sign placement with the Engineer for conformance approval.

As part of the Traffic Control Item, It shall be the responsibility of the contractor to make every reasonable attempt possible to maintain traffic during the construction period. While it may be impossible at times to permit traffic around the work zone it will be the responsibility of the contractor to keep the actual work zone to a minimum. Should it be necessary to close a portion of the street the contractor must maintain a level of coordination with the residence so that they do not unknowingly become stranded, The contractor shall devise a plan to meet the ingress / egress needs of the residence. In no instance shall the roadway be inaccessible while no work is being performed.

All costs incurred in maintaining traffic are to be considered part of the Traffic Control pay item. No additional payments will be made for the maintenance of traffic. Payment for Traffic Control shall be by the unit and rate as described in the proposal. No other payments shall be made.

SAW CUTS - The Contractor shall saw cut all meets relative to sidewalk, driveway, or pavement construction unless waived by the Engineer. No payment shall be allowed for Saw Cutting unless specified in the proposal.

SOIL DENSITY - When soil density is specified, the Contractor shall deposit the backfill or fill in layers not to exceed 12" in depth, loose measure, parallel to the finished grade for the full width of area to be filled. Each layer shall be compacted by the use of suitable equipment to a minimum of 95% of the maximum unit weight unless otherwise specified. The maximum unit weight will be determined by the current method of testing for the compaction and density of soil, A.A.S.H.T.O. designation T-99 as revised. The Contractor shall provide all labor and equipment necessary to prepare the site or location for density testing. The City of Muskegon will provide

personnel and testing equipment and will conduct the density testing at specified locations, and will conduct one retest on failed sections at no cost to the Contractor. When additional testing is required, due to inadequate compaction, the Contractor will be charged for time, materials, equipment and all incidental costs involved. No payment shall be allowed for trench or sub grade density.

ADJUSTING SMALL CASTINGS - Whenever small castings are encountered outside the paved area they shall be adjusted at no cost to the City unless stipulated within the proposal. Castings for stop boxes, meter pits, and water valves are included in the scope of this item. If the existing materials are deficient they shall be replaced by the City at no cost to the Contractor under the same provisions as defined in Stock Room Materials.

TRENCH REPAIR - VARIOUS TYPES

General Information - for all types.

Removing Existing Pavement: The Contractor shall remove the existing pavement to a sufficient width to eliminate undermining of adjacent paved areas and to provide safe, adequate working conditions.

Saw Cutting Trench Perimeters: The Contractor shall saw cut, using straight lines, parallel with the trench center line or as directed by the Engineer.

Secondary Trench Rehabilitation: - Trenches that extend beyond the principal trench saw cut edge, and are caused by the installation of lateral mains, connections or hydrant installations shall be paid by the lineal foot method, measured on the trench center line, beginning at the edge of the principal trench, in accordance with the pavement type defined in the proposal.

Local Street - Type I to include:

1. Remove existing pavement including curbs and gutters.
2. Saw cut trench perimeters.
3. Place Concrete Pavement, 6" thick with curbs and gutters as existing. Extra strength concrete as proposal designated.

Local Street - Type II to include:

1. Remove existing pavement including curbs.
2. Saw cut trench perimeters.
3. Place Concrete Base Course, 6" thick, with curbs. Extra strength concrete as proposal designated.
4. Place Bituminous Surface Mixture, @ 165# per square yard.

Local Street - Type III to include:

1. Remove existing pavement, including curbs and gutters.
2. Saw cut trench perimeters.
3. Place 22A Aggregate Base Course, 6" thick.
4. Place Curb and Gutter per existing.
5. Place Bituminous Leveling Mixture @ 165# per square yard.
6. Place Bituminous Bond Coat @ 0.05 Gal. per square yard.

7. Place Bituminous Top Mixture @ 165# per square yard.

Local Street - Type IV to include:

1. Remove existing pavement, including curbs and gutters.
2. Saw cut trench perimeters.
3. Place Curb and Gutter per existing.
4. Place Bituminous Base Mixture @ 440# per square yard in two lifts.
5. Place Bituminous Bond Coat @ 0.05 Gal. per square yard.
6. Place Bituminous Top Mixture @ 165# per square yard.

Local Street - Type V to include:

1. Place 22A Aggregate Base Course, 6" thick.

Major Street - Type I to include:

1. Remove existing pavement, including curbs and gutters.
2. Saw cut trench perimeters.
3. Place Concrete Pavement, 8" thick, including curb and gutter. Extra strength concrete as proposal designated.

Major Street - Type II to include:

1. Remove existing pavement, including curbs and gutters.
2. Saw cut trench perimeters.
3. Place Concrete Base Course, 8" thick, including curb and gutter. Extra strength concrete as proposal designated.
4. Place Bituminous Bond Coat @ 0.05 Gal. per square yard.
5. Place Bituminous Top Mixture @ 220# per square yard.

Major Street - Type III to include:

1. Remove existing pavement, including curbs and gutters.
2. Saw cut trench perimeters.
3. Place Curb and Gutter per existing.
4. Place Aggregate Base Course (22A), 8" thick.
5. Place Bituminous Leveling Mixture @ 165# per square yard.
6. Place Bituminous Bond Coat @ 0.05 Gal. per square yard.
7. Place Bituminous Top Mixture @ 220# per square yard.

Major Street - Type IV to include:

1. Remove existing pavement, including curbs and gutters.
2. Saw cut trench perimeters.
3. Place Curb and Gutter per existing.
4. Place Bituminous Base Mixture @ 660# per square yard in two lifts.
5. Place Bituminous Bond Coat @ 0.05 Gal. per square yard.
6. Place Bituminous Top Mixture @ 220# per square yard.

State Trunk Lines - Contractor Note: No cost differentials shall be in effect for the various types of materials used on State Trunk Lines. The Contractor shall replace

pavement to the same section as found and shall conduct his work to conform to the Michigan Department of Transportation permit authorizing work in State right of ways. Concrete materials shall be 9 sack minimum.

Lawn Rehabilitation, Sod to include:

1. Place Prepared Soil, 3" thick.
2. Place Seed or Sod, Class "A" or "B", as proposal designated.

Lawn Rehabilitation, Seed to include:

1. Prepared Top Soil, 3" thick
2. Class "A" Seeding - 100# per acre.
3. Mulch - 2 Ton per acre
4. Fertilizer - 240# per acre.
5. Water as necessary.

The Contractor may hydroseed (using the same application rates as above), with the approval of the Engineer. Payment shall be by the lineal foot as measured along the centerline of the trench.

Concrete Sidewalk to include:

1. Remove existing sidewalk.
2. Saw cut trench perimeters.
3. Place Concrete Sidewalk per existing.

Trench Repair - Special to include:

1. Prepared Soil, 3" thick.
2. Sod, Class "A".
3. Concrete Curb as required.
4. Concrete Drive Approach.
5. Concrete Sidewalk.
6. Gravel Shoulder, 6" thick.
7. All other disturbed structures or areas shall be rehabilitated to the original condition.

Payment for Trench Repair - Special shall be by the lineal foot, measured on the pipeline centerline, as described in the proposal. Payment shall be in full for all of the above items.

Trench Repair - Payment - Payment for Trench Repair, as described in the proposal, shall be payment in full for all work described under the above various types. Lineal Foot measurements shall be measured on the center line of pipe installation. No other payment shall be made.

SOIL EROSION CONTROL

Description - The contractor shall install and maintain all soil erosion and sedimentation (SESC) controls, as indicated on the plans or as directed by the Engineer, to prevent soil from entering storm drains, surface waters and areas beyond project limits.
Catch Basin Protection - Catch basin inlet protection drops (Silt Sacks with Overflow Capability) shall be installed in all new and existing basins. Geotextile fabric covers or wraps are not allowed.

Silt Fence - Silt fence shall be trenched in as required. Clean fence when soil reaches 50% of fence height.

Soil Removal - Remove soil tracked onto paved public roads on a daily basis. Vacuum methods are preferred, but sweeping is acceptable if material is returned to a suitable location.

Inspection - Inspect all controls measures on a weekly basis or after each rainfall event. Clean, replace or repair as necessary, to ensure proper function.

Temporary Soil Control Duration - All temporary control measures shall remain in place until all disturbed areas are adequately stabilized.

Payment - ll costs for SESC controls, except for the catch basin inlet protection drops, shall be included in the excavation pay item, unless noted otherwise. No other payment shall be made unless authorized by the Engineer.

CITY OF MUSKEGON

OFFICE OF THE CITY ENGINEER

STANDARD CONSTRUCTION SPECIFICATIONS

DIVISION 17
PUBLIC UTILITIES

Approved by the City Commission
February 09, 2010

DIVISION 17
PUBLIC UTILITIES

GAS - The DTE Energy (Michigan Consolidated Gas Company) requests that the Contractor refrain from cutting any gas lines. The Contractor will work around the live gas mains, if the Contractor requests the removal of a live gas line to make construction easier, the Gas Company will do this cutting with their own crew and bill the Contractor for this work. If an abandon gas main is in the way of construction the Gas Company will make the first cut to confirm that it is abandoned, at no cost to the Contractor, after this the Contractor can remove the abandon gas main as needed. This work shall be included item of work being performed and no payment shall be made by the City or the Gas Company.

Where the Contractor encounters any gas line that is parallel or transversally to the trench that he is excavating, he is to support the gas line until the back filling is in place. Where conditions are such that this would be impossible, he is to sheet the trench or brace the pipe so that it meets with the satisfaction of the Engineer and the Gas Company. This work shall be included item of work being performed and no payment shall be made by the City or the Gas Company.

The Contractor shall call MISS DIG three (3) Working Days Excluding Saturday, Sunday and Holidays before digging 1-800-482-7171, for staking the location of the existing gas mains. The Contractor will be responsible for any damages that occur during the course of his excavation to any of the Gas Company utilities.

POWER - The Consumers Energy Company will not brace or support any power poles, if any power poles need to be braced or supported during the construction the Contractor will be responsible for this work, there may be instances where sheeting by each pole would more desirable than bracing, all of the above work shall be included item of work being performed and no payment shall be made by the City or the Power Company for bracing or supporting power poles.

No poles may be moved or climbed by anyone except employees of the Consumers Energy Company. Power poles in conflict with construction will be moved by Consumers Energy Company at no cost to the contractor, if the Contractor requests the relocating of a power pole to make construction easer, the Power Company will do this relocating with their own crew and bill the Contractor for this work. No payment shall be made by the City or the Power Company for the above work.

The Contractor shall call MISS DIG three (3) Working Days Excluding Saturday, Sunday and Holidays before digging 1-800-482-7171, for staking the location of the existing electric lines. The Contractor will be responsible for any damages that occur during the course of his excavation to any of the Power Company utilities.

TELEPHONE - The Verizon Telephone Company will not brace or support any phone poles, if any phone poles need to be braced or supported during the construction the Contractor will be responsible for this work, there may be instances where sheeting by each pole would more desirable than bracing, all of the above work shall be included item of work being performed and no payment shall be made by the City or the Phone Company for bracing or supporting phone poles.

No poles may be moved or climbed by anyone except employees of the Phone Company. Phone poles in conflict with construction will be moved by the Phone Company at no cost to the contractor, if the Contractor requests the relocating of a phone pole to make construction easer,

the Phone Company will do this relocating with their own crew and bill the Contractor for this work. No payment shall be made by the City or the Phone Company for the above work.

Where the Contractor encounters any underground conduits that are parallel or transversally to the trench that he is excavating, he is to support the conduits until the back filling is in place. Where conditions are such that this would be impossible, he is to sheet the trench or brace the conduit so that it meets with the satisfaction of the Engineer and the Phone Company. No payment shall be made by the City or the Phone Company for the above work.

The Contractor shall call MISS DIG three (3) Working Days Excluding Saturday, Sunday and Holidays before digging 1-800-482-7171, for staking the location of the existing phone lines. The Contractor will be responsible for any damages that occur during the course of his excavation to any of the Phone Company utilities.

CABLE T.V. - The Comcast Cable T.V. Company uses the phone and power poles, and if any phone or power poles are relocated the Cable Company will relocate with them at no cost to the Contractor, if the Contractor request the relocating of a cable lines to make construction easier, the Cable Company will do this relocating with their own crew and bill the Contractor for this work. . No payment shall be made by the City or the Cable Company for the above work.

The Contractor shall call MISS DIG three (3) Working Days Excluding Saturday, Sunday and Holidays before digging 1-800-482-7171, for staking the location of the existing cable lines. The Contractor will be responsible for any damages that occur during the course of his excavation to any of the Cable Company utilities.

PART 5 – SPECIAL SPECIFICATIONS

FOR ALL PAY ITEMS

All pay items shall be constructed as specified in the Michigan Department of Transportation 2012 Standard Specifications for Construction, Michigan Department of Transportation Standard Plans, and the City of Muskegon Standard Specifications for Watermain except where modified in these Special Specifications. Materials for all pay items shall meet the specifications as specified in the Michigan Department of Transportation 2012 Standard Specifications for Construction, Michigan Department of Transportation Standard Plans, and The City of Muskegon Standard Specifications for Watermain except where modified in these Special Specifications.

UTILITY COORDINATION

The contractor shall cooperate and coordinate construction activities with the owners of utilities as stated in Section 104.08 of the 2012 MDOT Standard Specifications for Construction. In addition, for the protection of underground utilities, the contractor shall follow the requirements in section 107.12 of the 2012 MDOT Standard Specifications for Construction. Contractor delay claims, resulting from a utility, will be determined based upon Section 108.09 of the 2012 MDOT Standard Specifications for Construction.

Public Utilities

The following Public Utilities have facilities located within the Right-of-Way:

Consumers Energy – Joel Brown
700 E Sternberg Road
Norton Shores Mi, 49441
Phone: (231) 332-2682

Frontier Communications. – David B. Flermoen
860 Terrace Street
Muskegon, Michigan 49440
Phone: (231) 727-1319

DTE Energy – Vincent Duca
2359 Olthoff Drive
Muskegon, Michigan 49444
Phone: (231) 578-0488

Comcast – Jonathan Charland
700 W. Broadway Avenue
Muskegon Heights Mi 49444
Phone: (231) 357-5112

City of Muskegon Department of Public Works & Utilities – Dave Baker
1350 E. Keating Avenue
Muskegon, Michigan 49442
Phone: (231) 724-4100

Western Tel-Com, Inc – Eric Merrifield
(For Muskegon Area Intermediate School District)
A-4273 Blue Star Highway P.O. Box 1317
Holland, Michigan 49422
Phone: (616) 393-0138 ext. 125

On all Projects: **"three working days before you dig - Call Miss Dig - Toll Free"....811**.The owners of existing service facilities that are within grading or structure limits will move them to locations designated by the Engineer or will remove them entirely from the highway Right-of-Way. Owners of Public Utilities will not be required by the County/City to move additional poles or structures in order to facilitate the operation of construction equipment unless it is determined by the Engineer that such poles or structures constitute a hazard to the public or are extraordinarily dangerous to the contractor's operations.

PROGRESS CLAUSE

The Project shall not start until August 1, 2021 and not until after receiving the Notice to Proceed. The Contractor shall not start work before date designated as the starting date in the detailed Progress Schedule approved by the Engineer. In no case shall any work be commenced prior to receipt of formal Notice to Proceed from the City of Muskegon.

The entire project shall be completed including final site restoration and clean-up on or before December 1, 2021. Once the project starts construction, work shall be substantial completed within 8 weeks.

Failure by the Contractor to meet the above requirements and dates will result in the Contractor being assessed liquidated damages in accordance with section 108.10 of the 2012 Standard Specifications for Construction. Liquidated damages will continue to be assessed for each calendar day or portion of the day that this work remains incomplete even if these days extend beyond the typical seasonal shut-down date of November 14th.

The confirmed low bidder shall submit a detailed "Progress Schedule", (MDOT Form 1130 may be used), to the Project Engineer at the preconstruction meeting. After receiving, reviewing and approving the completed Progress Schedule, the Project Engineer shall sign and forward the approved Progress Schedule to the Contractor.

Lack of a timely submittal and approval of the Progress Schedule by the Contractor, will result in the Project Engineer delaying contract award per subsection 102.15 of the 2012 MDOT Standard Specifications for Construction.

The Progress Schedule shall include, as a minimum, the controlling work items for the completion of the project and the planned dates that these work items will be controlling operations. When specified in the Bidding Proposal, the date the project is to be opened to traffic, as well as the final project completion date, shall also be included in the Progress Schedule.

If the Bidding Proposal specifies other controlling dates, these shall also be included in the Progress Schedule.

Failure on the part of the Contractor to carry out the provisions of the Progress Schedule, as established, may be considered sufficient cause to prevent bidding future projects until a satisfactory rate of progress is again established.

The starting date, contract time, or completion date for this project may be adjusted by the City of Muskegon without imposing liquidated damages upon the receipt of satisfactory documented evidence that unforeseen delays have occurred. The procedure for Progress Schedule, Contract Time Extensions, and Liquidated Damages will be pursuant to Section 108 of the MDOT 2012 Standard Specifications for Construction

CITY OF MUSKEGON
SPECIAL SPECIFICATION
FOR
PAVT, REM, MODIFIED

City of Muskegon

DESCRIPTION:
The work covered by this special provision shall be in accordance with Sections 204 of the MDOT 2012 Standard Specifications for Construction

CONSTRUCTION METHODS:
The work covered by this special provision shall be in accordance with the applicable requirements in Section 204 of the MDOT 2012 Standard Specifications for Construction, except for the following:

> H92037 MONROE STREET: The existing HMA pavement is approximately two inches thick. In addition there is concrete pavement under the HMA that is approximately six to eight inches thick. The Contractor is responsible for verification of this data before submitting his bid for this item.
>
> H92046 ALLEY IMPROVEMENTS: The existing concrete pavement is approximately six inches thick. There are several patches in the alley, which may be HMA. Thickness of each patch may vary. Concrete Curb and Gutter, Rem and Sidewalk, Rem will be included in Pavt, Rem, Modified and will not be paid separately.

MEASUREMENT AND PAYMENT:
Only one (1) pavement removal item will be considered, regardless of pavement thickness or materials. Payment for pavement being removed will be classified as **Pavt, Rem, Modified.** Payment for removing curb and gutter will be included in this pay item and will not be paid for separately. The completed work, Pavt, Rem, Modified including all materials, labor and equipment as measured will be paid for at the contract unit price for the following contract item (pay item):

PAY ITEM	PAY UNIT
Pavt, Rem, Modified	Square Yard

CITY OF MUSKEGON
SPECIAL SPECIFICATION
FOR
MACHINE GRADING, MODIFIED

City of Muskegon

DESCRIPTION:

The work covered by this special provision shall be in accordance with Section 205 of the MDOT 2012 Standard Specifications for Construction, except where modified herein.

CONSTRUCTION METHODS:

H92037 Monroe:
Under the Machine Grading, Modified pay item contractor shall place 1 to 3 inches of embankment or excavate 1 to 3 inches of the existing sand from station 1+01 to 5+19. The resulting sub base shall be shaped to the proposed cross section as shown on sheet 2 of the construction plans. The existing new base will be watered and compacted to 95% of the maximum unit weight.

All excess excavated material (sand and aggregate) shall become property of the contractor. There will be approximately 129 cubic yards of excavation, of which 8 cubic yards will be used as embankment. Embankment shall meet Granular Material Class II specifications. The remaining 121 cubic yards LM will be removed from the jobsite and become property of the contractor.

From station 1+01 TO 2+00 there is approximately 29.9 cubic yards of excavation and 0 cubic yards of embankment.

From station 2+00 TO 3+00 there is approximately 34.5 cubic yards of excavation and 0 cubic yard of embankment.

From station 3+00 TO 4+00 there is approximately 15 cubic yards of excavation and 0 cubic yards of embankment.

From station 4+00 TO 5+00 there is approximately 21.1 cubic yards of excavation and 7.4 cubic yards of embankment.

From station 5+00 TO 5+19 there is approximately 28.7 cubic yards of excavation and 0 cubic yards of embankment.

Payment for grading and compacting for proposed sidewalks, driveways, terraces, sidewalk ramps, intersection returns and any other areas that need grading and compacting for new items of work will be included in the Machine Grading, Modified pay item.

CITY OF MUSKEGON
SPECIAL PROVISION
FOR
MACHINE GRADING, MODIFIED

City of Muskegon

H92046 Alley Improvements:
Under the Machine Grading, Modified pay item contractor shall excavate 1 to 5 inches of the existing base from station 0+19 to 4+44. The resulting sub base shall be shaped to the proposed cross section as shown on sheet 6 of the construction plans. The existing new base will be watered and compacted to 95% of the maximum unit weight.

All excess excavated material (sand and aggregate) shall become property of the contractor. There will be approximately 20 cubic yards LM to be removed from the jobsite and become property of the contractor.

Payment for grading and compacting for proposed sidewalks, driveways, terraces, sidewalk ramps, intersection returns and any other areas that need grading and compacting for new items of work will be included in the Machine Grading, Modified pay item.

MEASUREMENT AND PAYMENT:

Payment for Machine Grading, Modified shall be at the bid proposal unit price per station (100' intervals) as measured **once** along centerline of the Monroe.

Pay Item:	Pay Unit:
Machine Grading, Modified	Station

CITY OF MUSKEGON
SPECIAL SPECIFICATION
FOR
SEWER, PVC SDR 35, _INCH, TR DET B, MODIFIED

City of Muskegon

DESCRIPTION:
The work covered by this special provision shall be in accordance with Section 402 of the 2012 MDOT Standard Specifications for Construction except as modified herein.

MATERIALS:
Solid walled PVC pipe conforming to A.S.T.M. D 3034-SDR35 specification. The pipe shall be of integral bell design using elastomeric gaskets supplied or recommended by the manufacturer. Lubricant meeting the manufacturer's specifications shall be used on all joints.

CONSTRUCTION METHODS:
The work covered by this special provision shall be in accordance with the applicable requirements in Section 402 except as modified herein.

Assembly of Pipe: Clean bell and spigot of all dirt. If gasket is not preinstalled insert the gasket into the groove in the bell end and seat firmly. Apply lubricant to the spigot end of the pipe. Push the spigot end past the gasket into the bell housing to the insertion depth recommended by the manufacturer. The pipe may be pushed with the use of a bar and block. Mechanical equipment may only be used if it is an acceptable method to the manufacturer. Allowable drift between structures from proposed alignment is 0.20 foot for line and 0.02 foot for grade

Installation: Pipe shall be laid upstream with spigot end downstream. The pipe shall be laid on a firm, dry, frost free, and uniformly supported trench bottom. If rocks, boulders, or other protruding objects exist in the trench, they shall be removed to a point where a bedding of four inches can be provided around the pipe. The bedding material shall be Granular Class II. Pipe alignment shall be rigidly maintained. Any single pipe deviating more than ½" from straight in 10 feet shall not be used. Allowable drift between structures from proposed alignment is 0.20 foot for line and 0.02 foot for grade.

Bends: When bends are needed to adjust line and grade of the new PVC sewer to meet the existing sewer, they will be included in the payment for Sewer, PVC SDR 35. _ inch, Tr Det B. No additional payment shall be allowed for bends used match line and grade of the new sewer to the existing sewer. Bends shall conform the A.S.T.M. specification for D 3034-SDR35.

CITY OF MUSKEGON
SPECIAL SPECIFICATION
FOR
SEWER, PVC SDR 35, _INCH, TR DET B, MODIFIED

City of Muskegon

Pipe Connections: When it is necessary to connect the new pipe to an existing pipe the connection will be made with the appropriate size Fernco. This connection will be included in this pay item and will not be paid for separately.

MEASUREMENT AND PAYMENT:
The completed work, Sewer, PVC SDR 35, __ inch, Tr Det B, Modified, including all materials, labor and equipment, as measured will be paid for at the contract unit price for the following contract items (pay items).

PAY ITEM	PAY UNIT
Sewer, PVC SDR 35, 10 inch, Tr Det B, Modified	Foot
Sewer, PVC SDR 35, 12 inch, Tr Det B, Modified	Foot

CITY OF MUSKEGON
SPECIAL SPECIFICATION
FOR
SEWER BULKHEAD, __ INCH

City of Muskegon

DESCRIPTION: The work covered by this special provision shall be in accordance with Section 402 of the MDOT 2012 Standard Specifications for Construction except where modified here in.

MEASUREMENT AND PAYMENT: The City will pay for each sewer bulkhead 12 inch and larger. Bulkheads less than 12 inch shall be included in the unit prices for related pay items. The completed work, SEWER BULKHEAD, __ INCH, including all materials, labor and equipment, will be paid for at the contract unit price for the following contract item (pay item).

PAY ITEM	PAY UNIT
SEWER BULKHEAD, 12 INCH	Each

CITY OF MUSKEGON
SPECIAL SPECIFICATION
FOR
SEWER LATERAL, PVC SDR 35, _INCH, TR DET B, MODIFIED

City of Muskegon

DESCRIPTION:
The work covered by this special provision shall be in accordance with Section 402 of the 2012 MDOT Standard Specifications for Construction except as modified herein.

MATERIALS:
Solid walled PVC pipe conforming to A.S.T.M. D 3034-SDR35 specification. The pipe shall be of integral bell design using elastomeric gaskets supplied or recommended by the manufacturer. Lubricant meeting the manufacturer's specifications shall be used on all joints.

CONSTRUCTION METHODS:
The work covered by this special provision shall be in accordance with the applicable requirements in Section 402 except as modified herein.

Assembly of Pipe: Clean bell and spigot of all dirt. If gasket is not preinstalled insert the gasket into the groove in the bell end and seat firmly. Apply lubricant to the spigot end of the pipe. Push the spigot end past the gasket into the bell housing to the insertion depth recommended by the manufacturer. The pipe may be pushed with the use of a bar and block. Mechanical equipment may only be used if it is an acceptable method to the manufacturer. Allowable drift between structures from proposed alignment is 0.20 foot for line and 0.02 foot for grade

Installation: Pipe shall be laid upstream with spigot end downstream. The pipe shall be laid on a firm, dry, frost free, and uniformly supported trench bottom. If rocks, boulders, or other protruding objects exist in the trench, they shall be removed to a point where a bedding of four inches can be provided around the pipe. The bedding material shall be Granular Class II. Pipe alignment shall be rigidly maintained. Any single pipe deviating more than ½" from straight in 10 feet shall not be used. Allowable drift between structures from proposed alignment is 0.20 foot for line and 0.02 foot for grade.

Bends: When bends are needed to adjust line and grade of the new PVC sewer to meet the existing sewer, they will be included in the payment for Sewer Lateral, PVC SDR 35, __ inch, Tr Det B, Modified. No additional payment shall be allowed for bends used match line and grade of the new sewer to the existing sewer. Bends shall conform the A.S.T.M. specification for D 3034-SDR35.

CITY OF MUSKEGON
SPECIAL SPECIFICATION
FOR
SEWER LATERAL, PVC SDR 35, INCH, TR DET B, MODIFIED

City of Muskegon

Pipe Connections: When it is necessary to connect the new pipe to an existing pipe, the connection will be made with the appropriate size Fernco. The existing pipe may be of a smaller size than called out on plans. A reducer may be required, this reducer will be paid for with this pay item and not paid for separately. This connection will be included in this pay item and will not be paid for separately.

MEASUREMENT AND PAYMENT:
This pay item will include all work and materials relating to storm sewer laterals. The completed work, Sewer, PVC SDR 35, __ inch, Tr Det B, Modified, including all materials, labor and equipment, as measured will be paid for at the contract unit price for the following contract items (pay items).

PAY ITEM	PAY UNIT
Sewer Lateral, PVC SDR 35, 8 inch, Tr Det B, Modified	Each

CITY OF MUSKEGON
SPECIAL SPECIFICATION
FOR
SEWER WYE, PVC SDR 35, __ INCH X __ INCH

City of Muskegon

DESCRIPTION: The work covered by this special provision shall be in accordance with the specifications contained in the Special Specification for Sewer, PVC SDR 35, ___ inch, Trench Detail B.

MEASUREMENT AND PAYMENT: The completed work, Sanitary Sewer Wye, PVC SDR 35, __ inch X __ inch including all materials, labor and equipment, as measured will be paid for at the contract unit price for the following contract items (pay items).

PAY ITEM	PAY UNIT
Sewer Wye, PVC SDR 35, 12 inch X 8 inch	Each

CITY OF MUSKEGON
SPECIAL SPECIFICATION
FOR
DR STRUCTURE COVER, ADJ, CASE I, MODIFIED

City of Muskegon

DESCRIPTION: The work covered by this special provision shall be in accordance with Section 403 of the 2012 MDOT Standard Specifications for Construction.

MATERIALS: The materials shall meet the requirements specified in Section 403.02 of the 2012 MDOT Standard Specifications for Construction.

CONSTRUCTION METHODS: The work covered by this special provision shall be in accordance with the applicable requirements in Section 403.03, and shall also include the following:

> Drainage Structure, Temporary Lowering will be included in pay item Dr Structure Cover, Adj, Case I, Modified. No payment for Dr Structure, Temporary Lowering will be allowed for the work of removing existing castings and steel plating of the drainage structure holes. This work will be included in the payment for Dr Structure Cover, Adj, Case I, Modified
>
> Replacement of pavement adjacent to the adjusted cover shall be constructed according to the DRAINAGE STRUCTURE COVER ADJUST DETAIL shown on sheet 4 of the construction plans.
>
> Payment includes adjusting the cover up or down, a maximum of **6 inches**, to the required elevation.

MEASUREMENT & PAYMENT: The completed work, Dr Structure Cover, Adj., Case 1, Modified, including all materials, labor, and equipment, as measured, will be paid at the contract unit price for the following contract item (pay item).

PAY ITEM	PAY UNIT
Dr Structure Cover, Adj, Case 1, Modified	Each

CITY OF MUSKEGON

SPECIAL PROVISION
FOR

ACCEPTANCE OF HOT MIX ASPHALT MIXTURE ON LOCAL AGENCY PROJECTS

APPR:CJB:JWB:07-05-16
FHWA:APPR:07-05-16

a. Description. This special provision provides sampling and testing requirements for local agency projects using the roller method and the nuclear density gauge testing. Provide the hot mix asphalt (HMA) mixture in accordance with the requirements of the standard specifications, except where modified herein.

b. Materials. Provide aggregates, mineral filler (if required), and asphalt binder to produce a mixture proportioned within the master gradation limits shown in the contract, and meeting the uniformity tolerance limits in Table 1.

Table 1: Uniformity Tolerance Limits for HMA Mixtures

Parameter			Top and Leveling Course		Base Course	
Number	Description		Range 1 (a)	Range 2	Range 1 (a)	Range 2
1	% Binder Content		-0.30 to +0.40	±0.50	-0.30 to +0.40	±0.50
2	% Passing	# 8 and Larger Sieves	±5.0	±8.0	±7.0	±9.0
		# 30 Sieve	±4.0	±6.0	±6.0	±9.0
		# 200 Sieve	±1.0	±2.0	±2.0	±3.0
3	Crushed Particle Content (b)		Below 10%	Below 15%	Below 10%	Below 15%

a. This range allows for normal mixture and testing variations. The mixture must be proportioned to test as closely as possible to the Job-Mix-Formula (JMF).
b. Deviation from JMF.

Parameter number 2 as shown in Table 1 is aggregate gradation. Each sieve will be evaluated on one of the three gradation tolerance categories. If more than one sieve is exceeding Range 1 or Range 2 tolerances, only the one with the largest exceedance will be counted as the gradation parameter.

The master gradation should be maintained throughout production; however, price adjustments will be based on Table 1. Aggregates which are to be used in plant-mixed HMA mixtures must not contain topsoil, clay, or loam.

c. Construction. Submit a Mix Design and a JMF to the Engineer. Do not begin production and placement of the HMA until receipt of the Engineer's approval of the JMF. Maintain the binder content, aggregate gradation, and the crushed particle content of the HMA mixture within the Range 1 uniformity tolerance limits in Table 1. For mixtures meeting the definition of top or leveling course, field regress air void content to 3.5 percent with liquid asphalt cement unless

specified otherwise on HMA application estimate. For mixtures meeting the definition of base course, field regress air void content to 3.0 percent with liquid asphalt cement unless specified otherwise on HMA application estimate.

Ensure all persons performing Quality Control (QC) and Quality Assurance (QA) HMA field sampling are “Local Agency HMA Sampling Qualified” samplers. At the Pre-Production or Pre-Construction meeting, the Engineer will determine the method of sampling to be used. Ensure all sampling is done in accordance with *MTM 313 (Sampling HMA Paving Mixtures)* or *MTM 324 (Sampling HMA Paving Mixtures Behind the Paver)*. Samples are to be taken from separate hauling loads.

For production/mainline type paving, obtain a minimum of two samples, each being 20,000 grams, each day of production, for each mix type. The Engineer will sample and maintain possession of the sample. Sampling from the paver hopper is prohibited. Each sample will be divided into two 10,000 gram parts with one part being for initial testing and the other part being held for possible dispute resolution testing. Obtain a minimum of three samples for each mix type regardless of the number of days of production.

Obtain samples that are representative of the day’s paving. Sample collection is to be spaced throughout the planned tonnage. One sample will be obtained in the first half of the tonnage and the second sample will be obtained in the second half of the tonnage. If planned paving is reduced or suspended, when paving resumes, the remaining sampling must be representative of the original intended sampling timing.

Ensure all persons performing testing are Bit Level One certified or Bit QA/QC Technician certified.

Ensure daily test samples are obtained, except, if the first test results show that the HMA mixture is in specification, the Engineer has the option of not testing additional samples from that day.

At the Pre-Production or Pre-Construction meeting, the Engineer and Contractor will collectively determine the test method for measuring asphalt content (AC) using *MTM 319 (Determination of Asphalt Content from Asphalt Paving Mixtures by the Ignition Method)* or *MTM 325 (Quantitative Extraction of Bitumen from HMA Paving Mixtures)*. Back calculation will not be allowed for determining asphalt content.

Ensure all labs performing local agency acceptance testing are qualified labs per the *HMA Production Manual* and participate in the MDOT round robin process, or they must be *AASHTO Materials Reference Laboratory* (AMRL) accredited for *AASHTO T 30* or *T 27*, and *AASHTO T 164* or *T 308*. Ensure on non-National Highway System (NHS) routes, Contractor labs are made available, and may be used, but they must be qualified labs as previously stated. Contractor labs may not be used on NHS routes. Material acceptance testing will be completed by the Engineer within 14 calendar days, except holidays and Sundays, for projects with less than 5,000 tons (plan quantity) of HMA and within 7 calendars days, except holidays and Sundays, for projects with 5,000 tons (plan quantity) or more of HMA, after the Engineer has obtained the samples. QA test results will be provided to the Contractor after the Engineer receives the QC test results. Failure on the part of the Engineer or the laboratory to provide Quality Assurance test results within the specified time frame does not relieve the Contractor of their responsibility to provide an asphalt mix within specifications.

The correlation procedure for ignition oven will be established as follows. Asphalt binder content based on ignition method from MTM 319. Gradation (*ASTM D 5444*) and Crushed particle content *(MTM 117)* based on aggregate from *MTM 319*. The incineration temperature will be established at the Pre-Production Meeting. The Contractor will provide a laboratory mixture sample to the acceptance laboratory to establish the correction factor for each mix. Ensure this sample is provided to the Engineer a minimum of 14 calendar days prior to production.

For production/mainline type paving, the mixture may be accepted by visual inspection up to a quantity of 500 tons per mixture type, per project (not per day). For non-production type paving defined as driveways, approaches, and patching, visual inspection may be allowed regardless of the tonnage.

The mixture will be considered out-of-specification, as determined by the acceptance tests, if for any one mixture, two consecutive tests per parameter, (for Parameter 2, two consecutive aggregate gradations on one sieve) are outside Range 1 or Range 2 tolerance limits. If a parameter is outside of Range 1 tolerance limits and the second consecutive test shows that the parameter is outside of Range 2, then it will be considered to be a Range 1 out-of-specification. Consecutive refers to the production order and not necessarily the testing order. Out-of-specification mixtures are subject to a price adjustment per the Measurement and Payment section of this special provision.

Contractor operations will be suspended when the mixture is determined to be out-of-specification, but contract time will continue to run. The Engineer may issue a Notice of Non-Compliance with Contract Requirements (Form 1165), if the Contractor has not suspended operations and taken corrective action. Submit a revised JMF or proposed alterations to the plant and/or materials to achieve the JMF to the Engineer. Effects on the Aggregate Wear Index (AWI) and mix design properties will be taken into consideration. Production and placement cannot resume until receipt of the Engineer's approval to proceed.

Pavement in-place density will be measured using one of two approved methods. The method used for measuring in-place density will be agreed upon at a pre-production or pre-construction meeting.

Pavement in-place density tests will be completed by the Engineer during paving operations and prior to traffic staging changes. Pavement in-place density acceptance testing will be completed by the Engineer prior to paving of subsequent lifts and being open to traffic.

<u>Option 1 – Direct Density Method</u>

Use of a nuclear density gauge requires measuring the pavement density using the Gmm from the JMF for the density control target. The required in-place density of the HMA mixture must be 92.0 to 98.0 percent of the density control target. Nuclear density testing and frequency will be in accordance with the *MDOT Density Testing and Inspection Manual*.

<u>Option 2 – Roller Method</u>

The Engineer may use the Roller Method with a nuclear or non-nuclear density gauge to document achieving optimal density as discussed below.

Use of the density gauge requires establishing a rolling pattern that will achieve the required in-place density. The Engineer will measure pavement density with a density gauge using the Gmm from the JMF for the density control target.

Use of the Roller Method requires developing and establishing density frequency curves, and meeting the requirements of Table 2. A density frequency curve is defined as the measurement and documentation of each pass of the finished roller until the in-place density results indicate a decrease in value. The previous recording will be deemed the optimal density. The Contractor is responsible for establishing and documenting an initial or QC rolling pattern that achieves the optimal in-place density. When the density frequency curve is used, the Engineer will run and document the density frequency curve for each half day of production to determine the number of passes to achieve the maximum density. Table 5, located at the end of this special provision, can be used as an aid in developing the density frequency curve. The Engineer will perform density tests using an approved nuclear or non-nuclear gauge per the manufacturer's recommended procedures.

Table 2: Minimum Number of Rollers Recommended Based on Placement Rate

Average Laydown Rate, Square Yards per Hour	Number of Rollers Required (a)	
	Compaction	Finish
Less than 600	1	1 (b)
601 - 1200	1	1
1201 - 2400	2	1
2401 - 3600	3	1
3601 and More	4	1

a. Number of rollers may increase based on density frequency curve.
b. The compaction roller may be used as the finish roller also.

After placement, roll the HMA mixture as soon after placement as the roller is able to bear without undue displacement or cracking. Start rolling longitudinally at the sides of the lanes and proceed toward the center of the pavement, overlapping on successive trips by at least half the width of the drum. Ensure each required roller is 8 tons minimum in weight unless otherwise approved by the Engineer.

Ensure the initial breakdown roller is capable of vibratory compaction and is a maximum of 500 feet behind the paving operations. The maximum allowable speed of each roller is 3 miles per hour (mph) or 4.5 feet per second. Ensure all compaction rollers complete a minimum of two complete rolling cycles prior to the mat temperature cooling to 180 degrees Fahrenheit (F). Continue finish rolling until all roller marks are eliminated and no further compaction is possible. The Engineer will verify and document that the roller pattern has been adhered to. The Engineer can stop production when the roller pattern is not adhered to.

d. Measurement and Payment. The completed work, as described, will be measured and paid for using applicable pay items as described in subsection 501.04 of the Standard Specifications for Construction, or the contract, except as modified below.

Base Price. Price established by the Department to be used in calculating incentives and adjustments to pay items and shown in the contract.

If acceptance tests, as described in section c. of this special provision, show that a Table 1 mixture parameter exceeds the Range 1, but not the Range 2, tolerance limits, that mixture parameter will be subject to a 10 percent penalty. The 10 percent penalty will be assessed based on the acceptance tests only unless the Contractor requests that the 10,000 gram sample part retained for possible dispute resolution testing be tested. The Contractor has 4 calendar days from receipt of the acceptance test results to notify the Engineer, in writing, that dispute resolution testing is requested. The Contractors QC test results for the corresponding QA test results must result in an overall payment greater than QA test results otherwise the QA tests will not be allowed to be disputed. The Engineer has 4 calendar days to send the dispute resolution sample to the lab once dispute resolution testing is requested. The dispute resolution sample will be sent to an independent lab selected by the Local Agency, and the resultant dispute test results will be used to determine the penalty per parameter, if any. Ensure the independent lab is a MDOT QA/QC qualified lab or an AMRL HMA qualified lab. The independent lab must not have conflicts of interest with the Contractor or Local Agency. If the dispute testing results show that the mixture parameter is out-of-specification, the Contractor will pay for the cost of the dispute resolution testing and the contract base price for the material will be adjusted, based on all test result parameters from the dispute tests, as shown in Table 3 and Table 4. If the dispute test results do not confirm the mixture parameter is out-of-specification, then the Local Agency will pay for the cost of the dispute resolution testing and no price adjustment is required.

If acceptance tests, as described in section c. of this special provision, show that a Table 1 mixture parameter exceeds the Range 2 tolerance limits, the 10,000 gram sample part retained for possible dispute resolution testing will be sent, within 4 calendar days, to the MDOT Central Laboratory for further testing. The MDOT Central Laboratory's test results will be used to determine the penalty per mixture parameter, if any. If the MDOT Central Laboratory's results do not confirm the mixture parameter is out-of-specification, then no price adjustment is required. If the MDOT Central Laboratory's results show that the mixture is out-of-specification and the Engineer approves leaving the out-of-specification mixture in place, the contract base price for the material will be adjusted, based on all parameters, as shown in Table 3 and Table 4.

In the case that the Contractor disputes the results of the test of the second sample obtained for a particular day of production, the test turn-around time frames given would apply to the second test and there would be no time frame on the first test.

The laboratory (MDOT Central Laboratory or independent lab) will complete all Dispute Resolution testing and return test results to the Engineer, who will provide them to the Contractor, within 13 calendar days upon receiving the Dispute Resolution samples.

In all cases, when penalties are assessed, the penalty applies to each parameter, up to two parameters, that is out of specification.

Table 3: Penalty Per Parameter

Mixture Parameter out-of-Specification per Acceptance Tests	Mixture Parameter out-of-Specification per Dispute Resolution Test Lab	Price Adjustment per Parameter
NO	N/A	None
YES	NO	None
	YES	Outside Range 1 but not Range 2: decrease by 10%
		Outside Range 2: decrease by 25%

The quantity of material receiving a price adjustment is defined as the material produced from the time the first out-of-specification sample was taken until the time the sample leading to the first in-specification test was taken.

Each parameter of Table 1 is evaluated with the total price adjustment applied to the contract base price based on a sum of the two parameter penalties resulting in the highest total price adjustment as per Table 4. For example, if three parameters are out-of-specification, with two parameters outside Range 1 of Table 1 tolerance limits, but within Range 2 of Table 1 limits and one parameter outside of Range 2 of Table 1 tolerance limits and the Engineer approves leaving the mixture in place, the total price adjustment for that quantity of material is 35 percent.

Table 4: Calculating Total Price Adjustment

Cost Adjustment as a Sum of the Two Highest Parameter Penalties		
Number of Parameters Out-of-Specification	Range(s) Outside of Tolerance Limits of Table 1 per Parameter	Total Price Adjustment
One	Range 1	10%
	Range 2	25%
Two	Range 1 & Range 1	20%
	Range 1 & Range 2	35%
	Range 2 & Range 2	50%
Three	Range 1, Range 1 & Range 1	20%
	Range 1, Range 1 & Range 2	35%
	Range 1, Range 2 & Range 2	50%
	Range 2, Range 2 & Range 2	50%

Table 5: Density Frequency Curve Development

Tested by:_____ Date/Time: _____

Route/Location:		Air Temp:
Control Section/Job Number:		Weather:
Mix Type:	Tonnage:	Gauge:
Producer:	Depth:	Gmm:

Roller #1 Type:

Pass No.	Density	Temperature	Comments
1			
2			
3			
4			
5			
6			
7			
8			
Optimum			

Roller #2 Type:

Pass No.	Density	Temperature	Comments
1			
2			
3			
4			
5			
6			
7			
8			
Optimum			

Roller #3 Type:

Pass No.	Density	Temperature	Comments
1			
2			
3			
4			
5			
6			
7			
8			
Optimum			

Summary: _____

_____

_____

_____

_____

CITY OF MUSKEGON
SPECIAL SPECIFICATION
FOR
HYDROSEEDING

City of Muskegon

DESCRIPTION: The work covered by this special specification shall be in accordance with Section 816 of the MDOT 2012 Standard Specifications for Construction.

MATERIALS: The materials shall meet the requirements specified in Section 816, except for the following: Overseeder II Mixture, or equal, designed for Irrigated systems shall be used. Ideal Shade Mixture, or equal, designed for non-irrigated systems shall be used. The engineer will specify the need for the Overseeder II Mixture based on irrigated systems present within the project limits.

CONSTRUCTION METHODS: The work covered by this special specification shall be in accordance with the applicable requirements in Section 816 except for the following:

This work shall consist of placing the seed by hydraulic means.

Seed type as specified, mulch, adhesive, and fertilizer shall be mixed in a solution of water and sprayed evenly over the ground area covered.

The Contractor shall use care spraying around signs, drives, sidewalk, and personal property. Excess material shall be rinsed promptly from these areas with clear water.

Application rates shall be the same as conventional methods:

Overseeder II Mixture (Irrigated) 125-200 #/acre
Ideal Shade Mixture (Non-Irrigated 150-200#/acre
Hydromulch - per manufacturer
Adhesive - per manufacturer
Fertilizer - Class A @ 228#/acre
Water - as necessary.

MEASUREMENT AND PAYMENT: The completed work, Hydroseeding including all materials, labor and equipment, as measured will be paid for at the contract unit price for the following contract item (pay item).

PAY ITEM	PAY UNIT
Hydroseeding	Square Yard

CITY OF MUSKEGON
SPECIAL SPECIFICATION
FOR
CUT AND CAP, _ INCH WATERMAIN

City of Muskegon

DESCRIPTION: This special provision defines and describes the methods and materials required to cut and cap watermains.

MATERIALS: The ___ inch cap shall be ductile iron cement lined and conforming to Mechanical Joint Fittings, AWWA C110 and AWWA C111.

CONSTRUCTION METHODS: The existing ___ inch watermain shall be cut and capped with a ___ inch ductile iron, mechanical joint cap and restrained with retaining glands. The existing valve and watermain must be restrained with clamps and tie rods before cutting the existing pipe as shown on the Detail for Cut and Cap, ___ inch Watermain on sheet 2 of the construction plans.

MEASUREMENT AND PAYMENT: The completed work, Cut and Cap, ___ inch Watermain including all materials, labor and equipment, as measured will be paid for at the contract unit price for the following contract item (pay item).

PAY ITEM	PAY UNIT
Cut and Cap, __ inch Watermain	Each

CITY OF MUSKEGON
SPECIAL SPECIFICATION
FOR
1 INCH WATER SERVICE, 1 INCH CORPORATION, AND 1 INCH CURB STOP AND BOX

City of Muskegon

DESCRIPTION: The work shall include replacing existing water services according to the Detail for Typical 1" Water Service on Sheet 2 of the Construction Plans. In addition and included in the price of the new water service will be the abandonment of the existing service by turning off and disconnecting the existing water service from the existing watermain and removing any existing curb stops or water meter pits.

MATERIALS: The materials shall meet the following requirements:

CORPORATION – The 1 inch corporation shall be a Mueller #15000 (service connection flared) or Mueller #H15008 (conductive compression connection) or approved equal.

CURB STOP AND BOX - The 1 inch curb stop shall be a Mueller #15157 or #15150 or approved equal with a 2 inch Minneapolis threaded top, bushed for 1.5 inch thread. The box shall be a Mueller #H10302 or approved equal, for 2 inch Minneapolis thread, bushed for 1.5 inch, complete with top.

WATER SERVICE PIPING - Water Service shall be constructed of Type "K" copper according to ASTM B88-55.

CONSTRUCTION METHODS: The 1 inch water service shall be placed according to the Detail for Typical 1" Water Service. Abandonment of the existing service shall be included in the price of the new water service. Abandon the existing service by turning off the existing corporation, disconnecting the existing water service from the existing watermain and removing any existing curb stops or water meter pits.

DAMAGED EXISTING SERVICES: Water services, not scheduled for replacement, which have been damaged during construction, shall be repaired using type k copper. When dresser couplings are installed, the contractor shall attach a continuity wire, AGW size #4 copper to both sides of the dresser, properly secured with an approved grounding clamp. The circuit shall then be tested for continuity.

If the service damaged is confirmed to contain galvanized steel, the entire service line from the main to a point within the building shall be replaced within 72 hours of being damaged. The Engineer will determine if full replacement is required.

No payment shall be allowed for services damaged during construction, except when grade collisions are encountered. In these cases, the Contractor will reroute the service, as instructed by the Engineer, on a lump sum basis agreed to at the time.

CITY OF MUSKEGON
SPECIAL SPECIFICATION
FOR
1 INCH WATER SERVICE, 1 INCH CORPORATION, AND 1 INCH CURB STOP AND BOX

City of Muskegon

MEASUREMENT AND PAYMENT: The completed work, including all materials, labor and equipment, as measured will be paid for at the contract unit price for the following contract items (pay items):

PAY ITEM	PAY UNIT
Corporation Stop, 1 inch	Each
Curb Stop and Box, 1 inch	Each
Water Service, 1 inch, Copper Type K	Foot

Payment for all fittings to connect the existing water service to the new 1 inch Water Service shall be included with payment for the water service material. Payment for abandonment of the existing service being replaced will be included in the payment for the new water service.

CITY OF MUSKEGON
SPECIAL SPECIFICATION
FOR
WATERMAIN & FITTINGS

City of Muskegon

DESCRIPTION:

This special provision defines and describes the methods and materials required to place new watermain and fittings.

MATERIALS:

WATERMAIN: Watermain pipe shall be cement lined ductile iron class 52 with push on joints. Pipe shall be restrained according to the attached PIPE RESTRAINT SCHEDULE with mechanical joints or push-on joints using field lock gaskets. All pipe joints shall be provided with electrical conductivity connections.

RETAINER GLANDS: Retainer gland Megalug series 1100 or approved equal shall be used for all mechanical joint pipe and fittings. The joint restraint ring and its wedging components shall be made of grade 60-42-10 ductile iron conforming to ASTM A536-84. The wedges shall be ductile iron heat treated to a minimum hardness of 370 BHN. Dimensions of the gland shall be such that it can be used with the standardized mechanical joint bell conforming to ANSI/AWWA C111/A21.11 and ANSI/AWWA C153/A21.53 of the latest revision. Torque limiting twist-off nuts shall be used to insure proper actuation of the restraining wedges. The Retainer Gland shall utilize standard tee head bolts and gasket conforming to ANSI A21.11. The Contractor shall submit to the Engineer a shop drawing or sample for Engineer approval

FITTINGS: Sleeves, Tees, Bends and reducer shall be ductile iron cement lined with mechanical joints conforming to, AWWA C110 and AWWA C111. All mechanical joints shall be restrained with retaining glands.

ELECTRICAL CONDUCTIVITY CONNECTIONS: One of the methods described below must be used to ensure electrical conductivity.

(a) Serrated Silicon Bronze Wedges
Two per joint for 3” through 12” pipe, four for larger pipe. Each wedge is to be driven into the opening between the plain end and the bell until snug. When four wedges are used, they are inserted side by side, in pairs. Wedges can be used with push-on joints only.
(b) Cable or Strap Bond Conductor
Installation of a cable or strap bond conductor across the joints of push-on and mechanical joint pipe and fittings. The copper cable or strap shall be capable of carrying 150 amps and be of sufficient flexibility to withstand ground and pipe movement after installation.

(c) Conductive Push-On Gaskets

These gaskets may be used in lieu of the wedges. Metal contact strips which are molded or inserted into the gasket must insure positive electrical contact between pipes.
A thorough cleaning of the gasket seating surface should be performed prior to assembly

WATERMAIN SPECIFICATION REFERANCE:

Ductile Iron, Push-On Joint, 3” – 24”, AWWA C151
Push-On Joint Detail, AWWA C111
Ductile Iron, Mechanical Joint, 3” – 24”, AWWA C151
Mechanical Joint Detail, AWWA C111
Cement Lining, AWWA C104. (Standard Thickness)
Ductile Iron Pipe Wall Thickness Determination, AWWA C150
Ductile Iron Flanged Joint Pipe, 3” – 24”, AWWA C151 and AWWA C110
Cast Iron and Ductile Iron Fittings, AWWA C110
Mechanical Joint Fittings, AWWA C110 and AWWA C111
Push-On Joint Fittings, AWWA C110 and AWWA C111
Flanged Fittings, AWWA C110
Flanges, ASA-B16.1 Standard Class 125
Copper Pipe, ASTM Spec B88-55 “Type K”
Retainer Glands, Megalug Series 1100
Fire Hydrants, AWWA C502

CONSTRUCTION METHODS

WATERMAIN PUSH ON JOINT ASSEMBLY: It is essential that the gasket groove be clean and free of foreign matter prior to lubrication and gasket installation. Wire brushing, wiping or flushing may be required.

The cleaned gasket groove shall be lubricated to make gasket installation easier and to assist in the proper positioning of the gasket. The gasket must be correctly positioned within the groove. Check with fingers to be sure of correct placement. Lubricate the gasket over its entire inner surface; as well as to the level of the plain end. The joint should be assembled with both pipes in reasonably straight alignment. Any deflection should be made after the joint is assembled.

On any field cut pipe, the outside edge must be beveled and smoothed as any sharp corner may cause gasket damage. Straight alignment is especially important when assembling field cut pipe. Field inspection by the Engineer must be accomplished before a field cut pipe may be joined.

During cold weather installations, keep gaskets warm prior to placement within the bell, to reduce their stiffness.

Payment for Watermain Push on Joint Assembly shall be included with the payment for each particular size of watermain and fittings installed.

WATERMAIN MECHANICAL JOINT ASSEMBLY: The inside of the bell and the plain end of the pipe must be thoroughly cleaned of all foreign matter and wire brushed if necessary. All surfaces and gaskets should be brushed over with soapy water. A rubber gasket and follower gland should be placed on the plain end “seated” in the mechanical flanged bell; and then the gasket firmly and evenly pressed into the bell. After the gland is in position for bolting, insert all bolts and make all nuts finger-tight. Keeping the plain end centrally located within the bell, begin tightening bolts, bringing all bolts up evenly at all points around the bell flange. Alternate bolts from side to side until all bolts are uniformly tight within the correct range of torque of 75 to 90 foot pounds (4” thru 24” sizes). If effective sealing is not attained at the maximum torque level, the joint should be disassembled and reassembled after thorough cleaning.

Payment for Watermain Mechanical Joint Assembly shall be included with the payment for each particular size of watermain and fittings installed.

WATERMAIN PIPE DEFLECTION: Deflections for obstructions or other purposes shall be governed by these allowable limits in the following table, unless further deflection is allowed by written communication from the Engineer.

CITY OF MUSKEGON
SPECIAL SPECIFICATION
FOR
WATERMAIN & FITTINGS

City of Muskegon

DEFLECTION TABLE

Pipe Size	Deflection in inches per 18 foot length	
3	24”	
4	24”	Note: Unrestrained
6	20”	Connections only.
8	15”	
10	15”	
12	15”	
14	10”	
16	10”	
18	8”	
20	8”	
24	6”	

WATERMAIN PIPE CARE: Care shall be taken to keep the interior of the pipe clean and free from dirt and other foreign materials. Bulkheads shall be used at the open ends of the pipe to insure cleanliness, especially at the end of each day’s work.

If there is water in the trench, a water-tight plug will be utilized, and the seal must remain in place until the trench is pumped completely dry. The end shall also be plugged whenever the pipe is left unattended. Pipe shall be laid with the bell ends facing in the direction of lying, unless otherwise directed by the Engineer.

Payment for watermain pipe care shall be included with the payment for each particular size of watermain and fittings installed.

HYDROSTATIC TEST: Watermains must be tested for leakage before the work is accepted. The lines shall be tested section by section by use of valves in the line or temporary plugs, but if conditions require, the Engineer may order any series of sections to be tested at one time.

The Contractor shall furnish the pump, gauge and other necessary materials and equipment and labor to properly make the test, which shall be made in the Engineer's or Inspector's presence, and the methods used shall be herein specified. The test shall be made at the high point in the line, which shall be determined by the Engineer.

The section or sections of the line to be tested shall be filled with potable water and the entrained air within the pipe expelled. The line shall be pumped up to a pressure of one hundred and fifty (150) pounds per square inch, and if the gauge holds, the test period shall be considered as started. The lines shall be continuously kept pumped to the specified one hundred and fifty (150) pounds per square inch pressure, for a two hour period, by pumping additional water into the line, and the amount of water so added shall be measured and considered to represent the leakage from the line under test during the testing period.

The leakage under the conditions of the test shall not exceed the values as shown in the following formula:

$$L = \frac{SD\sqrt{P}}{148{,}000}$$

Where:

L= Testing allowance (makeup water), in gallons per hour
S= Length of pipe tested, in feet
D= Nominal diameter of pipe, in inches
P= Average test pressure during the hydrostatic test, in pounds per square inch (gauge)

If the leakage exceeds the specified amount, the line shall be inspected for leaks.

After the line is repaired, the test shall be repeated. Final acceptance of the work shall not be made until the results of the test are satisfactory.

The Contractor shall notify the Engineer of his intent to retest at least 24 hours in advance. However, the Contractor shall not begin the retest until all attempts have been made to correct all defects, and approval for retesting has been given by the Engineer.

The City shall be responsible for all inspection costs for the first two hydrostatic tests of any section. If a section requires a third hydrostatic retest, the Contractor may be held liable for such inspection costs incurred by the City of Muskegon personnel.

The payment for hydrostatic testing shall be included in the payment for Watermain, DI, __ inch, Tr Det G, Modified. No separate payment will be made for testing.

CLEANING AND DISINFECTING WATERMAIN: All valves shall be operated by Water Department personnel only. After the hydrostatic tests have been satisfactorily completed the pipe lines shall be cleaned and flushed by introducing water from the city water mains into the completed line and the water allowed to flow from the far end of the section flushed until it runs clear. Before the main is chlorinated, it shall be flushed with potable water to remove air pockets and particulates. The flushing velocity in the main shall not be less than 3.0 ft./sec in accordance with AWWA C651 section 4.4.2. Each section tested shall be flushed separately.

After cleaning and flushing, the pipe line shall be disinfected by introducing liquid chlorine or calcium hypochlorite solution into the mains with methods and equipment approved by the Engineer. The solution shall remain in the lines for a period of at least 24 hours.
The liquid chlorine, or calcium hypochlorite solution containing not less than 10,000 PPM (one percent) of available chlorine, shall be introduced into the main through a corporation cock inserted in the horizontal axis of the pipe. The point of application shall be at the end of the section of the main where water form the existing water distribution system is available. A hydrant, valve or corporation cock at the far end of section treated shall be opened and water allowed to flow through the mains by opening a valve at the water supply end or by other means approved by the Engineer.

The chlorine or calcium hypochlorite solution shall be introduced into the main continuously while water is flowing, and the water pressure shall not exceed 20 pounds per square inch during the application of disinfectant.

The water shall be allowed to flow and the application of disinfectant continued until water flowing from the far end of section being treated shows a residual chlorine content of at least 50 parts per million when testing with an appropriate indicator. Each hydrant, valve and other lateral connection shall be flushed separately and following this operation all valves and hydrants shall be discontinued when the flow of water is stopped. The water so treated shall remain in the section under treatment for at least 24 hours with a chlorine residual of a least 10 PPM after that time. After the expiration of this period, the mains shall be flushed with water from the existing supply and water allowed to flow until the residual chlorine content does not exceed 2 parts per million or a residual acceptable to the City of Muskegon Department of Public Works, when tested with an appropriate indicator. An initial set of samples will be taken at this time and resampled after a minimum of 16 hours. Sets of samples shall be collected every 1200 Ft of the new watermain, plus one set from the end of the line and at least one set from each branch greater than one pipe length. Samples of water will be used to preform bacteriological analysis to determine the purity of the water.

The Contractor shall notify the Engineer at least 48 hours in advance of his intent to begin disinfection. Upon completion of the analysis of the water samples, the Engineer will notify the Contractor whether or not the results are satisfactory. If the results are not satisfactory, the Contractor shall repeat the cleaning and disinfection process until the results of the analysis are satisfactory.

When relieving the watermain of water, the Contractor shall provide, install and maintain adequate equipment and materials to create dry working conditions at the construction site. Drainage discharge location shall be approved by the Engineer. The Contractor shall ascertain the availability and adequacy of the discharge point. Damage to receiving sewers or other property, Public or Private, will be the responsibility of the Contractor.

Calcium hypochlorite for disinfecting watermains shall be of the high test type, in powder form and shall have from 65 percent to 70 percent available chlorine. High test hypochlorite must first be made in a paste and then thinned with potable water to a 10,000 PPM solution.

The preparation of a one percent solution (10,000 PPM) requires 1 pound of 65 to 70 percent available chlorine hypochlorite to 10 gallons of potable water. Solution must be mixed in a wooden barrel or plastic.

Cost of collecting samples and laboratory analysis shall be paid for by the City of Muskegon, up to a maximum of two tests per section. Any additional testing will be at the Contractors expense.

The payment for cleaning and disinfecting watermain shall be included in the payment of the Watermain, DI, __ inch, Tr Det G, Modified. No separate payment will be made for cleaning and disinfecting watermain.

WATERMAIN ELECTICAL CONDUCTIVITY: All ductile iron watermain and fittings furnished and installed under this contract shall be provided with electrical conductivity connections. Electrical conductivity connections shall be of one of the three methods described in the materials section of this special provision. After installation of the mains, backfilling and the hydrostatic pressure tests are completed, the system (pipe line and hydrants) shall be tested for electrical continuity and current capacity. It is imperative that all lines and appurtenances be filled with water prior to conductivity testing. The line will be tested in sections between hydrants. The hydrants and hydrant valves will be opened to bleed off any air in the lead. The hydrant will then be closed and the hydrant valve left open. Adjacent hydrants will serve as test section termini. The Contractor will provide electric current of 150 amperes for the tests. Direct current of 150 amperes, shall be passed through the pipe line for a period of five minutes. Current flow through the pipe shall be measured continuously on a suitable ammeter and shall remain steady without interruption or excessive fluctuation throughout the five minute test. Insufficient current or intermittent current or arcing, indicated by large fluctuations of the ammeter needle, shall be evidence of defective electrical contact in the pipe line. The cause shall be isolated and corrected. Thereafter, the section in which the defective test occurred shall be retested as a unit and shall meet the test requirements to the satisfaction of the Engineer. All electrical connections shall be capable of carrying 60 amps. Any pipe cut and repaired with couplings shall have electrical connections.

In addition, at the time the joint is made the Contractor shall test the joint for contact effectiveness. The actual conductivity test shall be run concurrently with the Hydrostatic Test.

The payment for testing the electrical conductivity of the new watermain shall be included in the payment of the Watermain, DI, __ inch, Tr Det G, Modified. No separate payment will be made for electrical conductivity testing.

CITY OF MUSKEGON
SPECIAL SPECIFICATION
FOR
WATERMAIN & FITTINGS

City of Muskegon

WATERMAIN CONNECTIONS: After new watermain has passed test for leakage, conductivity and disinfection the following proceedure will be followed to connect the new main to the existing mains

Just prior to assembly, all pipe and fittings shall be disinfected by swabbing with a 1% Calcium hypochlorite solution. Watermain shall be buried 6 feet below top of curb. Conductivity connections shall be made at each joint. Pipe deflection shall not exceed 15 inches for 8” pipe, and 20” for 6“pipe. All pipe and fittings shall be bedded to the springline and compacted to 95% density using vibratory methods. Subsequent backfill shall be placed in 12” lifts at 95% density. The new pipeline shall be thoroughly flushed out through the adjacent hydrants immediately after backfilling.

Payment for watermain connections shall be included with the payment for each particular size of watermain and fittings used to make connection.

CONTAMINATED SOILS: The engineer is not aware of any contamination, but should the contractor encounter a contaminated area, work shall cease and the specialized gaskets for use in contaminated areas will be used. Refer to AWWA C600 section 4.1 (**Permeation**), for instructions about how to proceed in contaminated work areas.

MEASUREMENT AND PAYMENT:
The completed work WATERMAIN and FITTINGS including all material, labor, and equipment, as measured will be paid at the contract unit price for the following contract items (pay items).

Pay Item	Pay Unit
Watermain, DI, _ inch, Tr Det G, Modified	Foot
Bend, _ inch, 45 Degree, DI MJ	Each
Sleeve, _ inch, Long, DI MJ	Each

CITY OF MUSKEGON
SPECIAL SPECIFICATION
FOR
WATER SERVICE, PRIVATE PROPERTY, __ INCH
WATER SERVICE, BUILDING CONNECTION, __ INCH

CITY OF MUSKEGON

DESCRIPTION

It is the intent of the City of Muskegon to replace water services to a point within each building in accordance with updated MDEQ guidelines. This specification shall be used for water service items beyond the curb stop or meter pit. Water services within the right of way (main to curb stop or meter pit) shall be installed according to City of Muskegon Standards for Construction, Division 13.

The work covered by this special specification shall be in accordance with the MDOT Standard Specifications for Construction, the City of Muskegon Standard Specifications, and current Michigan Plumbing Code, except where modifies herein. Any work on water services outside of the right of way will require plumbing permits from the inspections department. All work is to be in accordance to inspections department.

EXISTING PRIVATE FACILITIES

Existing wells, septic tanks, tile fields, lawn sprinklers or other facilities disturbed or damaged by the Contractor shall be repaired and restored to working condition before the end of that working day. Under no circumstances will such interruptions be extended overnight. The Contractor shall take necessary precautions not to allow any discharge from the above to enter any lake, stream or canal along the line of work. Costs for repairs or temporary service caused by the Contractor shall be at his own expense and no claims for extra work will be allowed.

All precautions necessary shall be taken to insure no damage occurs to homes, including basements.

MATERIALS

1. Water service pipe shall be 1-inch nominal diameter, Type K annealed, seamless copper manufactured in conformance with ASTM B88 specifications.

OR

2. Water service pipe shall be 1-inch nominal diameter, Crosslinked Polyethylene (PEX) Tubing manufactured in accordance with ANSI/AWWA C904, Crosslinked Polyethylene (PEX) Pressure Tubing, ½ -inch through 3-inch, for Water Service.
   A. Tubing shall be certified by approved testing agencies.
   B. Tubing shall have a minimum chlorine resistance designation code of 1 as tested in accordance with ASTM F2023, Standard Test Method for Evaluating the Oxidative Resistance of Crosslinked Polyethylene (PEX) Tubing and Systems to Hot Chlorinated Water, as specified in ASTM F876, Standard Specification for Crosslinked Polyethylene (PEX) Tubing.
   C. Tubing shall have a minimum UV resistance designation code of 3 as tested in accordance with ASTM F2657, Standard Test Method for Outdoor Weathering Exposure of Crosslinked Polyethylene (PEX) Tubing.
   D. Tubing material HDB and HDS ratings shall be listed in accordance with procedures no less restrictive than those of PPIU TR-3, Policies and Procedures for Developing Hydrostatic Design

Basis (HDB), Pressure Design Basis (PDB), Strength Design Basis (SDB), and Minimum Requires Strength Design Basis (SDB), and Minimum Required Strength (MRS) Ratings for Thermoplastic Piping Materials or Pipe.

E. Tubing shall be certified to NSF/ANSI 61 Drinking Water System Components- Health Effects, for use with Potable Water.
F. Markings – Tubing shall be marked in accordance with ANSI/AWWA C904 Sec.6.1.
G. Shipping and Delivery – Tubing shall be shipped and delivered in accordance with ANSI/AWWA C904 Sec 6.2.
H. Affidavit of Compliance – The affidavit of compliance shall be in accordance with ANSI/AWWA C904 Sec 6.3 and shall be provided to the Owner prior to work.

COORDINATION

The Contractor shall be responsible for scheduling the work with the homeowner for water service replacement. The City of Muskegon will supply billing/contact information for each location.

PERMITS

Contractor shall be responsible for obtaining and paying for all permits and coordinating any inspections required including the City of Muskegon plumbing permit obtained from the building inspection department. A plumbing permit will be required for each location where a water service is replaced. The form to be filled out can be found at:

https://www.muskegon-mi.gov/cresources/Plumbing-Permit-Application.pdf

CONSTRUCTION METHODS

A. The water service from the property line, via meter pit, to a point that is 18 inches inside the wall or at the valve inside the wall, whichever comes first, shall be replaced. The water service from the property line, via curb stop, to the actual meter location inside the building, shall be replaced.

B. Minimum depth of 5 ½ feet of bury below the existing grade.

C. All water service pipe connections shall be inspected under pressure by Engineer prior to backfill.

D. Backfill – Backfill materials shall meet the requirements of Section 902 of the 2012 Michigan Department of Transportation, "Standard Specifications for Construction." All backfill to be compacted to 95% of maximum density.

E. Tracer wire shall be installed for all PEX service lines.

F. PEX tubing shall be placed with sufficient slack (snaking) to accommodate contraction prior to backfill.

G. PEX tubing shall not be used in any location where there may be petroleum or chemical contamination in soil.

H. When PEX is run through foundation or basement wall, it must be protected by a rigid sleeve that spans the distance from within the wall out to the undisturbed soil in the pipe trench. The purpose of this protective sleeve is to prevent shearing of the PEX tubing at the wall in the event of settlement in the backfill around the wall. At the point where the sleeve terminates inside the foundation or wall, the space between the PEX tubing and the sleeve should be sealed to prevent leakage into the building. **In no case should petroleum based caulk or sealant be used.**

I. Final inspection – All inspections will be done by building inspections department, via plumbing permit. Contractor is to make all arrangements and coordination with inspections department.

J. If any water service is found to serve as building electrical ground and a different method of grounding is needed, the ground shall be relocated to proper ground per all current State and local building codes. An electrical permit may be needed for this work. No additional cost will be awarded for this work. According to current code, a section of the existing water service line no less than 10 FT in length may be left in place and continue to serve as the electrical ground with no need for an electrical permit.

POST REPLACEMENT FLUSHING

The Contractor shall flush the service line immediately after all connections have been completed in accordance with the ANSI/AWWA C810-17: *Replacement and Flushing of Lead Service Lines*. Water shall be flushed from an outside connection such as a hose-bib or from hose on the house side of the meter. This shall be closest to the point of entry as possible. Flushing shall be done at full velocity for at least 10 minutes.
The Engineer shall provide the customer with instruction on interior flushing.

POST REPLACEMENT DOCUMENTATION - The Contractor shall document the replacement service on a form provided by the City of Muskegon. The documentation shall include measurements from curb stop to at least two permanent points such as building corners.
Before and after digital photographs of line replacement shall be provided to show pre-replacement conditions and post-replacement restoration.

The completion date and time shall be provided along with time of flushing.

WARRANTY

The contractor shall provide a written statement of warranty and protection for a period of one year from date of final acceptance. Warranty work shall cover cost to repair leaks and leak damage at no cost to the City of Muskegon.

SALVAGED MATERIALS

Any removed meters shall be become the property of the City of Muskegon and delivered to the City of Muskegon DPW, 1350 East Keating Avenue.

CITY OF MUSKEGON
SPECIAL SPECIFICATION
FOR
WATER SERVICE, PRIVATE PROPERTY, __ INCH
WATER SERVICE, BUILDING CONNECTION, __ INCH

CITY OF MUSKEGON

MEASUREMENT AND PAYMENT

The completed work for replacing the water service line to a point within the building, including all materials, labor, equipment and permits, as measured, will include the following pay items at the contract price. Pay item of "WATER SERVICE, PRIVATE PROPERTY,__ INCH" shall include all material, labor, equipment, flushing, disinfection and installation of service line from curb stop/meter pit to exterior of foundation wall. Pay item of "WATER SERVICE, BUILDING CONNECTION,__ INCH" shall include everything beyond the exterior of the foundation wall, including all materials, labor, permits, coordination, scheduling and any possible electrical grounding modifications, to get the new service threw the foundation all and make the connection to existing plumbing.

PAY ITEM	PAY UNIT
WATER SERVICE, PRIVATE PROPERTY, __ INCH	LFT
WATER SERVICE, BUILDING CONNECTION, __ INCH	EACH

CITY OF MUSKEGON
SPECIAL SPECIFICATION
FOR
ABOVE GROUND VIDEO SURVEY

City of Muskegon

PART 1 - GENERAL

1.1 SUMMARY:

A. Work included: This Section includes the work required for production of an audio-video record of the Project area prior to construction.

1.2 JOB CONDITIONS:

A. General: Deliver one (1) copy of completed recording to the OWNER and one (1) copy to the ENGINEER before any construction work commences.

PART 2 - PRODUCTS

2.1 MATERIALS:

A. High Resolution DVD Format unless otherwise approved.

PART 3 - EXECUTION

3.1 PREPARATION:

A. Recording to be done during periods of good quality visibility. Recording not allowed during precipitation or when more than ten percent (10%) of the ground is covered with snow unless approved by ENGINEER.

3.2 PERFORMANCE:

A. Recording to be by electronic means. Continuous and simultaneous display by generated transparent information of the following:
   1. Hour:Minute:Second in upper left hand corner of screen.
   2. Month/Day/Year immediately below time.
   3. Stationing to be continuous and accurate corresponding to the project stationing in standard engineering symbols (i.e. 20+35) appearing in the lower left corner of the screen.
   4. Description of the area being viewed and the direction being viewed immediately above the stationing. Make mention of street names.

B. Coverage to include all surface features within the zone of influence of construction supported by an audio description. Coverage to include close-ups of any irregularities present.

C. Audio description shall be made simultaneously with the video coverage including a minimum of existing driveways, sidewalks, curbs, ditches, roadways, landscaping, trees, culverts, headwalls, retaining walls and buildings. Audio description to include discussion of any irregularities present.

D. Building numbers visible from the project area shall be noted visually and audibly on the tape.

E. The rate of speed in the direction of stationing shall not exceed an average of 48 feet per minute.

F. Panning or zooming in and out rates shall be controlled sufficiently in order that the object can be viewed clearly in playback.

G. When conventional wheeled vehicles are used, the distance from the camera lens to the ground shall not exceed 12 feet.

H. When area is not accessible by conventional wheeled vehicles, the contractor shall provide special conveyances or hand carried apparatus if approved by the ENGINEER.

END OF SECTION

Project Name	Monroe Street
Project Number	2020.2015
Date	11/20/2020 10:12
Client	
Boring Type	Hand Aug
Location	See BLD

Boring ID	B-1
DCP Starting Depth (in)	6.5

# of Blows	Cumulative Penetration (mm)	Hammer Type	Soil Type	CBR %
0	365	1	SP	
1	430	1	SP	2.7
1	465	1	SP	5.4
1	500	1	SP	5.4
1	535	1	SP	5.4
1	570	1	SP	5.4
1	605	1	SP	5.4
2	675	1	SP	5.4
2	735	1	SP	6.5
4	780	1	SP	19.4
2	840	1	SP	6.5
1	880	1	SP	4.7
1	920	1	SP	4.7
1	965	1	SP	4.1
1	1005	1	SP	4.7

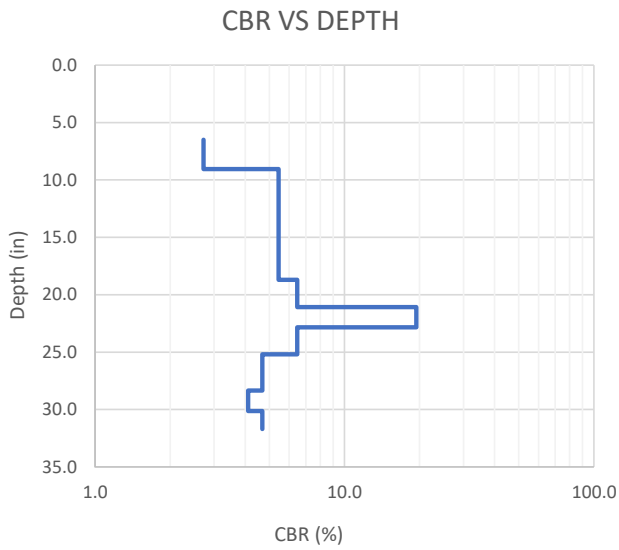

From (in)	To (in)	Thickness (in)	Description	Classification
0	0.75	0.75	ASPHALT WEARING - Intact/Voids	
0.75	6	5.25	CONCRETE	
6	63.5	57.5	Fine SAND, light brown	SP
			End of Test Hole at 63.5"	

No groundwater encountered.

Project Name	Monroe Street
Project Number	2020.2015
Date	11/20/2020 10:12
Client	
Boring Type	Hand Aug
Location	See BLD

Boring ID	B-2
DCP Starting Depth (in)	6.75

# of Blows	Cumulative Penetration (mm)	Hammer Type	Soil Type	CBR %
0	345	1	SP	
1	400	1	SP	3.3
1	425	1	SP	7.9
2	470	1	SP	8.9
2	525	1	SP	7.1
2	590	1	SP	5.9
1	635	1	SP	4.1
1	685	1	SP	3.7
1	730	1	SP	4.1
1	775	1	SP	4.1
1	815	1	SP	4.7
1	855	1	SP	4.7
1	895	1	SP	4.7
1	930	1	SP	5.4
1	970	1	SP	4.7
1	1010	1	SP	4.7

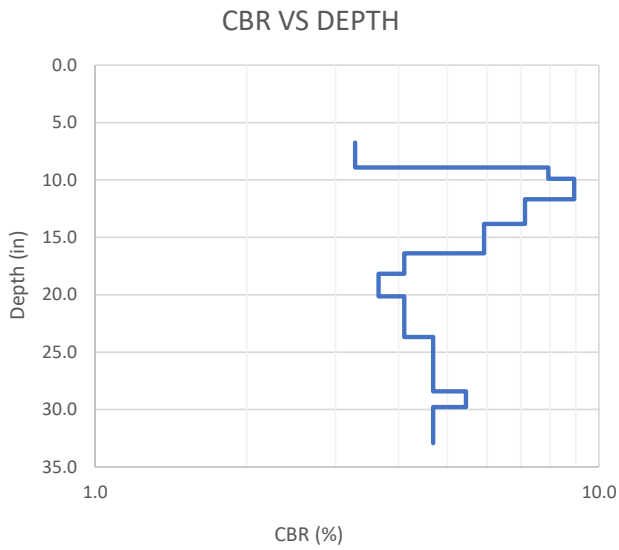

From (in)	To (in)	Thickness (in)	Description	Classification
0	0.75	0.75	ASPHALT WEARING - Intact/Voids	
0.75	6.5	5.75	CONCRETE	
6.5	63.5	57	Fine SAND, light brown	SP
			End of Test Hole at 63.5"	

No groundwater encountered.

SOILS & STRUCTURES

Ann Arbor • Muskegon • Traverse City

(800) 933-3959

TEST BORING LOCATION DIAGRAM

Not to Scale

Project Name: Muskegon Streets 2021

Location: Monroe Avenue, between 3rd St. and 4th St (Muskegon, Michigan)

Project Number: 2020.2015

Date: November 20, 2020

N

PART 6 – MDOT SPECIFICATIONS

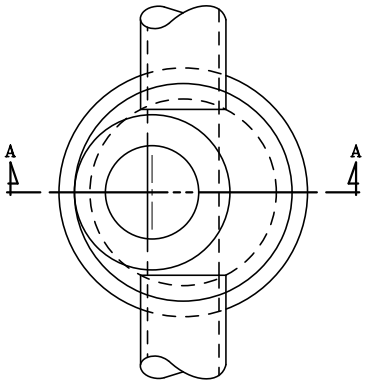

PLAN VIEW

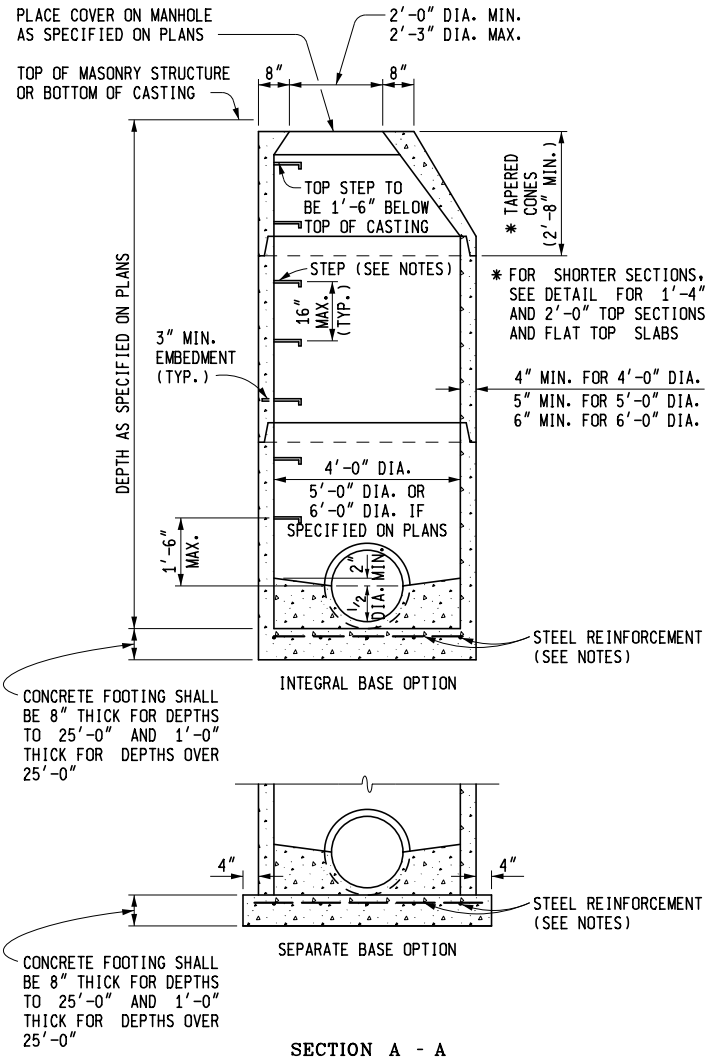

SECTION A - A

TYPICAL MANHOLE

PRECAST REINFORCED CONCRETE SHOWN
OTHER OPTIONS INCLUDE CONCRETE BLOCK, BRICK, OR CAST-IN-PLACE WALL SECTIONS
SEE TYPICAL WALL SECTIONS FOR WALL THICKNESS

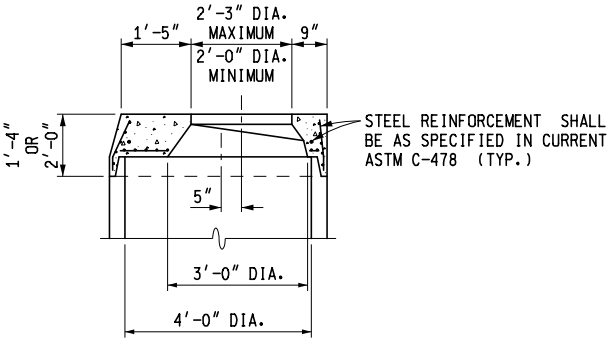

DETAIL FOR 1'-4" & 2'-0" TOP SECTIONS

SHAPE MAY VARY FROM DETAIL SHOWN BUT MUST COMPLY WITH ASTM C-478 AND JOINTS SHALL BE COMPATIBLE WITH THE RISER

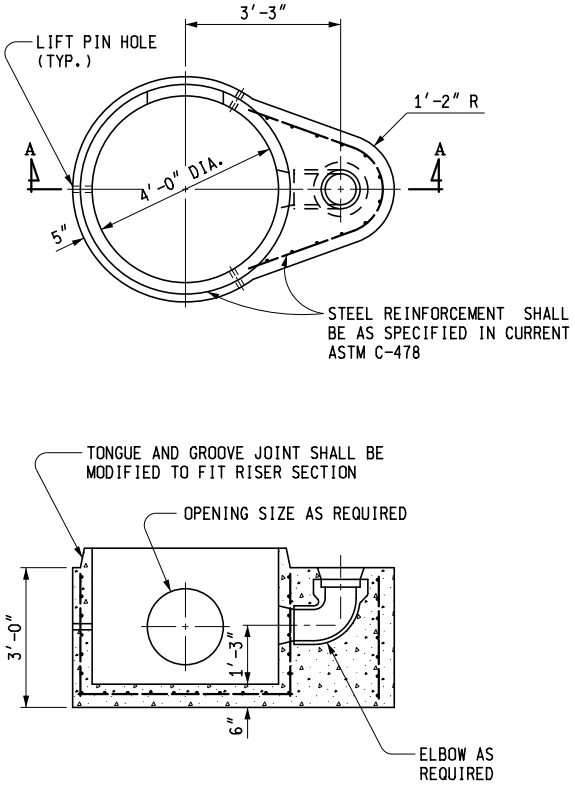

SECTION A - A

TYPICAL PRECAST REINFORCED BOTTOM SECTION FOR DROP MANHOLE

MDOT Michigan Department of Transportation

PREPARED BY DESIGN DIVISION

DRAWN BY: B.L.T.

CHECKED BY: W.K.P.

DEPARTMENT DIRECTOR
Kirk T. Steudle

APPROVED BY: _____
DIRECTOR, BUREAU OF FIELD SERVICES

APPROVED BY: _____
DIRECTOR, BUREAU OF DEVELOPMENT

MICHIGAN DEPARTMENT OF TRANSPORTATION
BUREAU OF DEVELOPMENT STANDARD PLAN FOR

DRAINAGE STRUCTURES

F.H.W.A. APPROVAL	6-15-2016 PLAN DATE	R-1-G	SHEET 1 OF 9

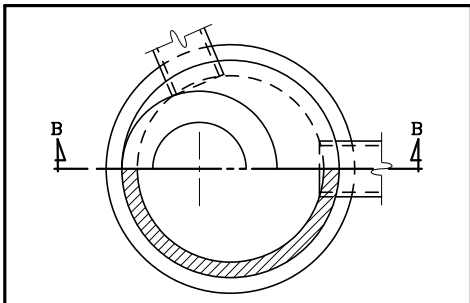

HALF SECTION A - A

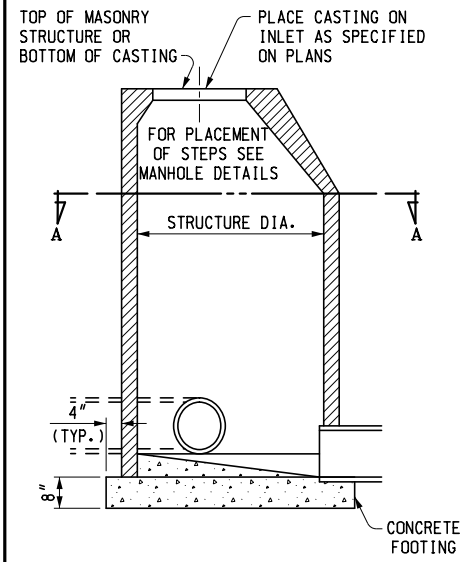

SEE MANHOLE DETAILS FOR SIZE AND BASE OPTIONS

SECTION B - B

INLET

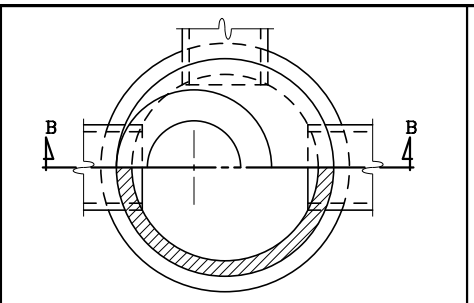

HALF SECTION A - A

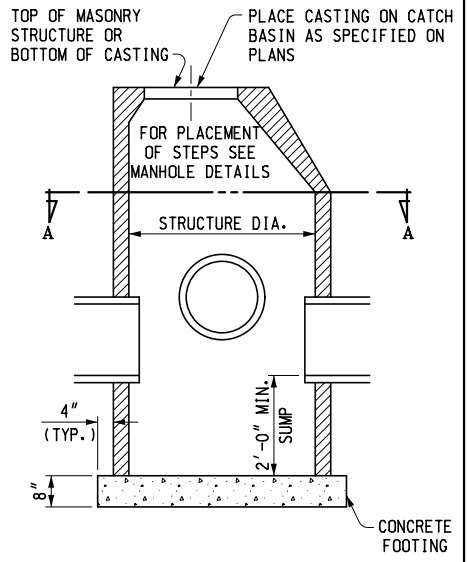

SEE MANHOLE DETAILS FOR SIZE AND BASE OPTIONS

SECTION B - B

CATCH BASIN

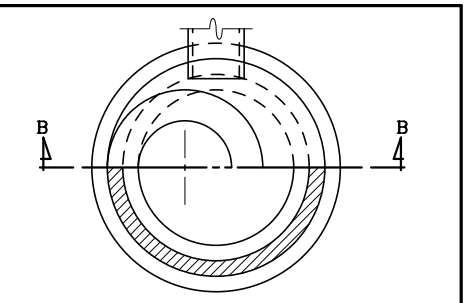

HALF SECTION A - A

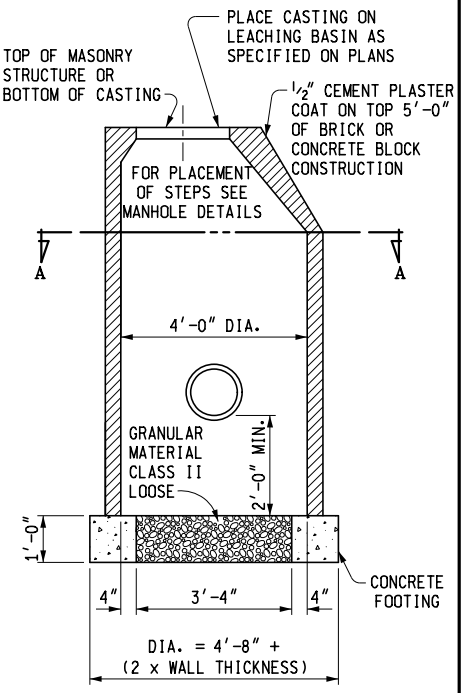

SEE MANHOLE DETAILS FOR BASE OPTIONS

SECTION B - B

LEACHING BASIN

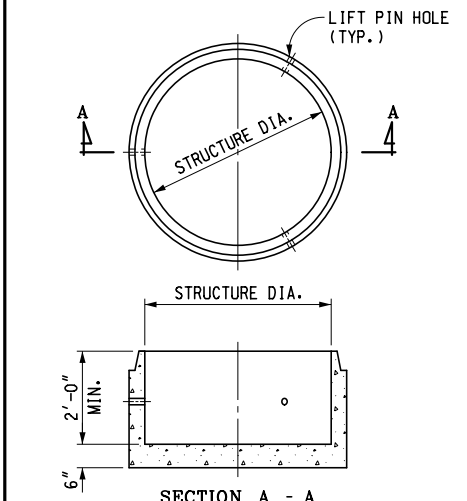

SECTION A - A

SEE MANHOLE DETAILS FOR SIZE AND BASE OPTIONS

PRECAST SUMP FOR PRECAST RISERS

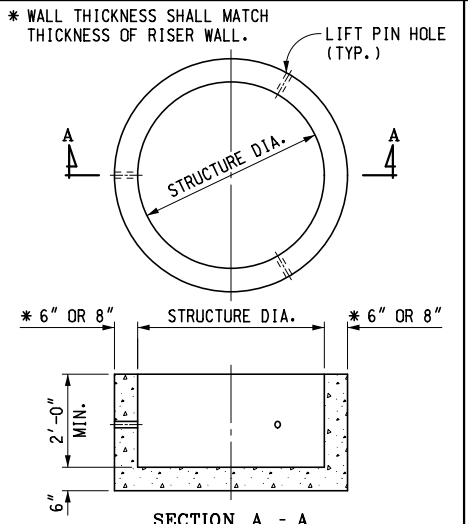

SECTION A - A

SEE TYPICAL BRICK AND BLOCK SECTION FOR SIZE AND BASE OPTIONS

PRECAST SUMP FOR BRICK OR BLOCK CONSTRUCTION

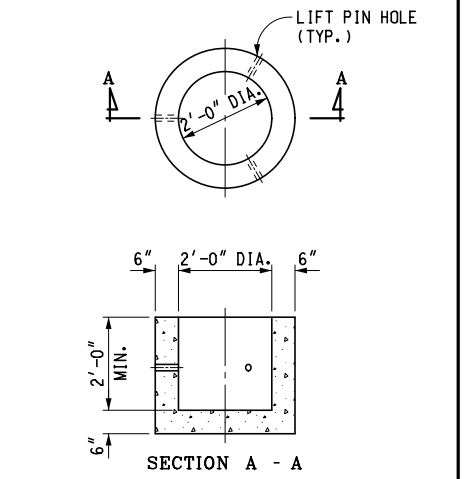

SECTION A - A

PRECAST SUMP FOR 2'-0" DIA. STRUCTURES

MICHIGAN DEPARTMENT OF TRANSPORTATION

BUREAU OF DEVELOPMENT STANDARD PLAN FOR

DRAINAGE STRUCTURES

F.H.W.A. APPROVAL	6-15-2016 PLAN DATE	R-1-G	SHEET 2 OF 9

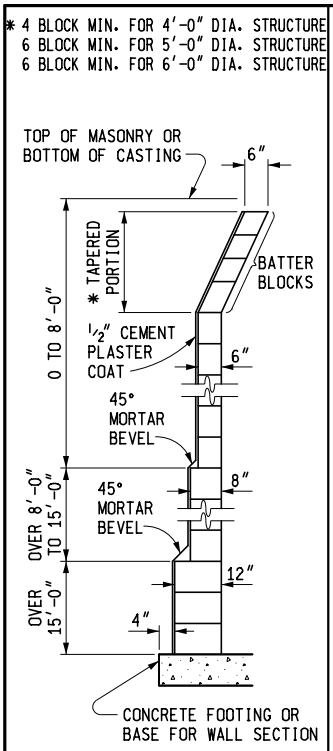

TYPICAL CONCRETE BLOCK WALL SECTION

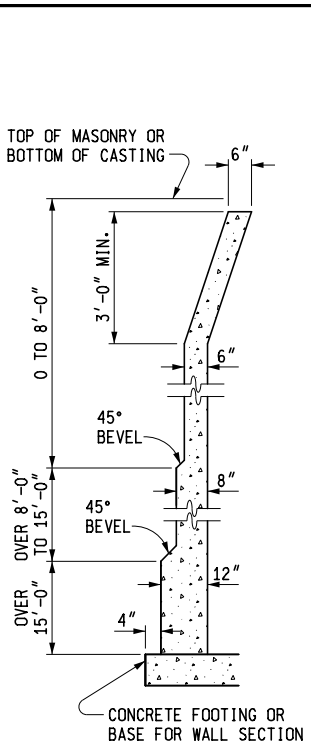

TYPICAL CAST-IN-PLACE CONCRETE WALL SECTION

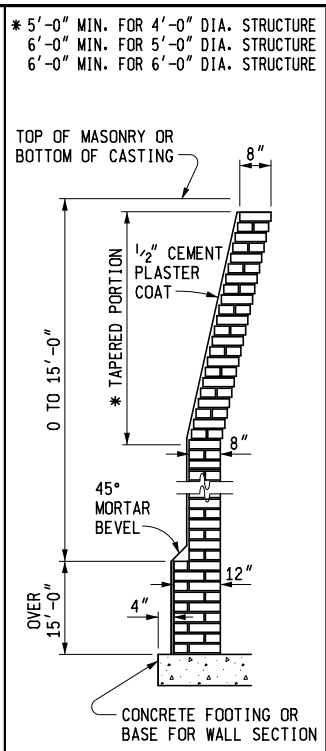

TYPICAL BRICK WALL SECTION

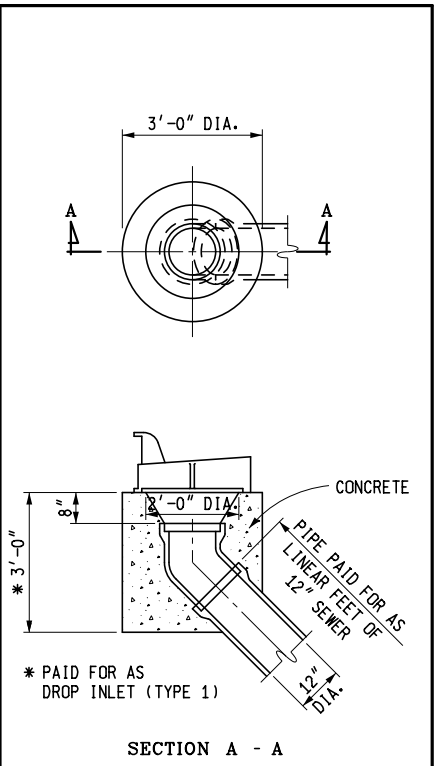

DROP INLET (TYPE 1)

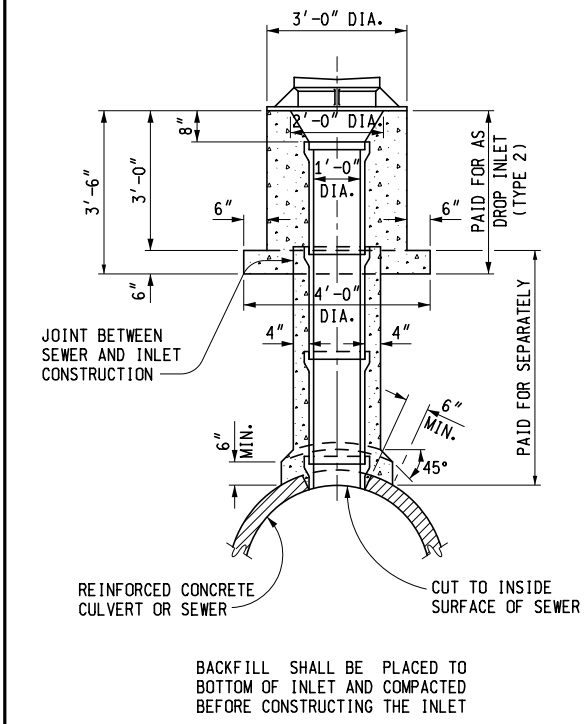

DROP INLET (TYPE 2)

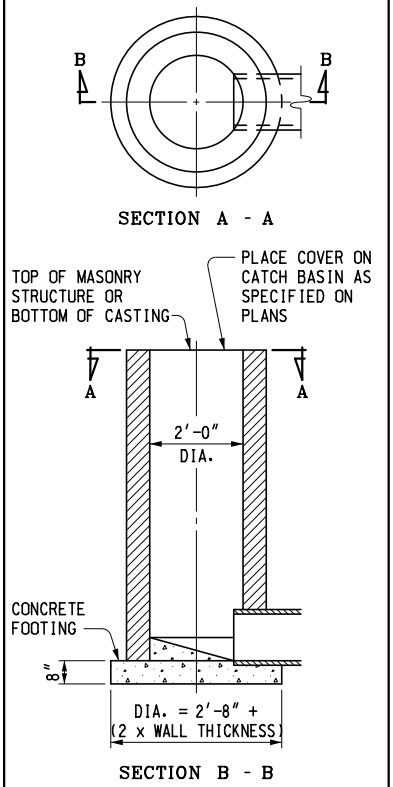

INLET

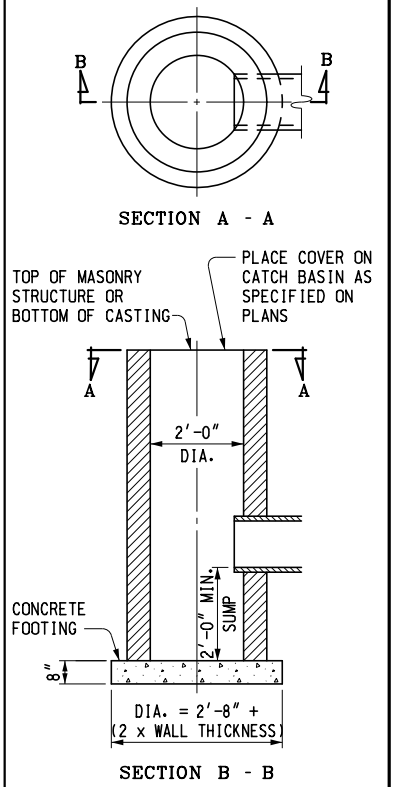

CATCH BASIN

MICHIGAN DEPARTMENT OF TRANSPORTATION
BUREAU OF DEVELOPMENT STANDARD PLAN FOR

DRAINAGE STRUCTURES

F.H.W.A. APPROVAL	6-15-2016 PLAN DATE	R-1-G	SHEET 3 OF 9

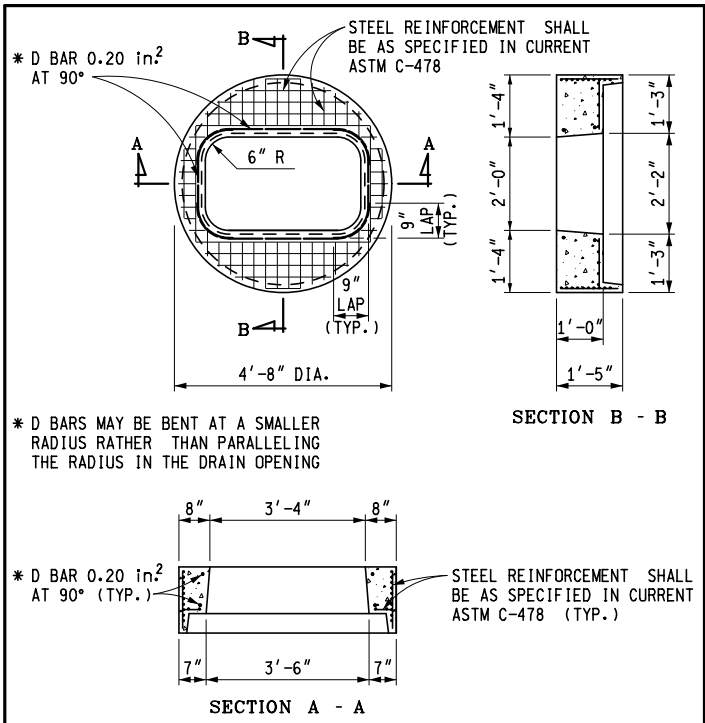

PRECAST FLAT SLAB TOP FOR PRECAST CONCRETE STRUCTURE, 2' x 4' CASTING

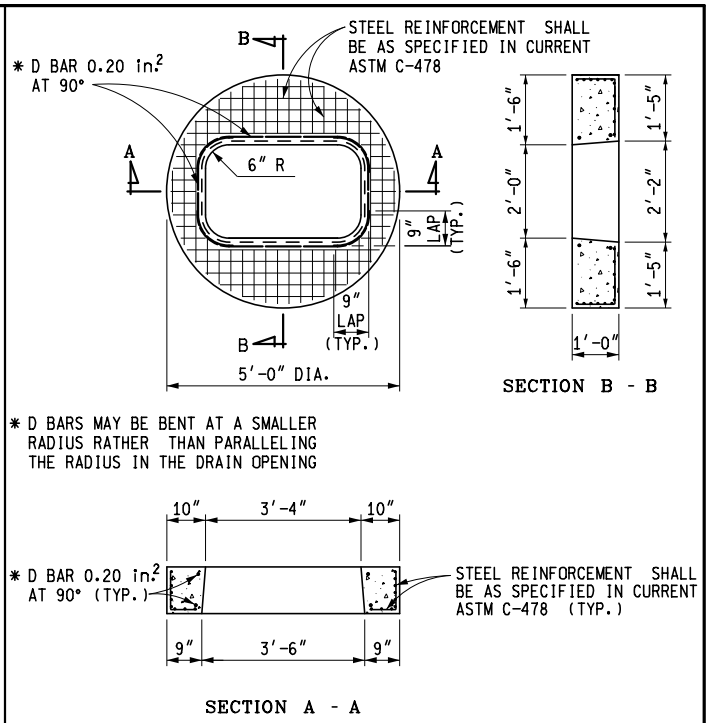

PRECAST FLAT SLAB TOP FOR MASONRY STRUCTURE, 2' x 4' CASTING

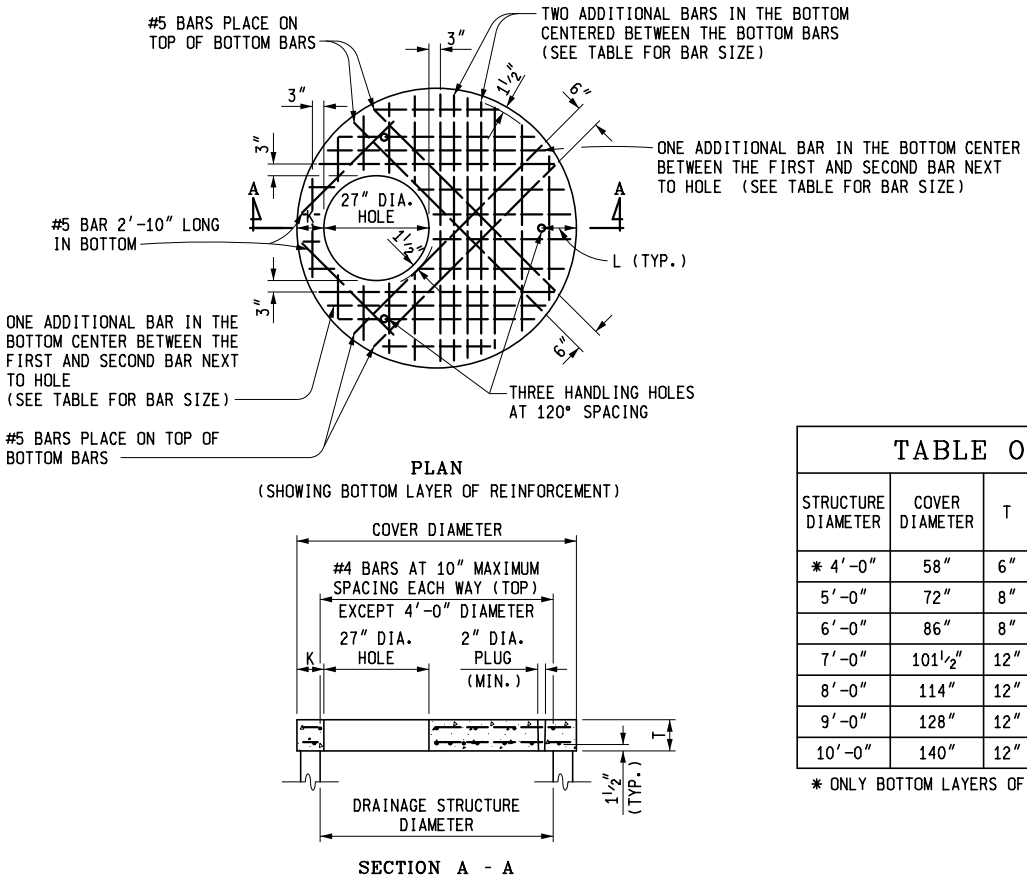

TABLE OF DIMENSIONS					
STRUCTURE DIAMETER	COVER DIAMETER	T	K	L	BAR MAXIMUM SPACING (BOTTOM EACH WAY)
* 4'-0"	58"	6"	6"	8"	#5 AT 6"
5'-0"	72"	8"	7"	9"	#5 AT 7"
6'-0"	86"	8"	8"	10"	#5 AT 6"
7'-0"	101½"	12"	8¾"	11"	#5 AT 5"
8'-0"	114"	12"	9"	11"	#6 AT 6"
9'-0"	128"	12"	10"	12"	#5 AT 6"
10'-0"	140"	12"	10"	13"	#5 AT 6"

* ONLY BOTTOM LAYERS OF STEEL NECESSARY

PRECAST REINFORCED CONCRETE FLAT SLAB TOP

MICHIGAN DEPARTMENT OF TRANSPORTATION
BUREAU OF DEVELOPMENT STANDARD PLAN FOR

DRAINAGE STRUCTURES

F.H.W.A. APPROVAL	6-15-2016 PLAN DATE	R-1-G	SHEET 4 OF 9

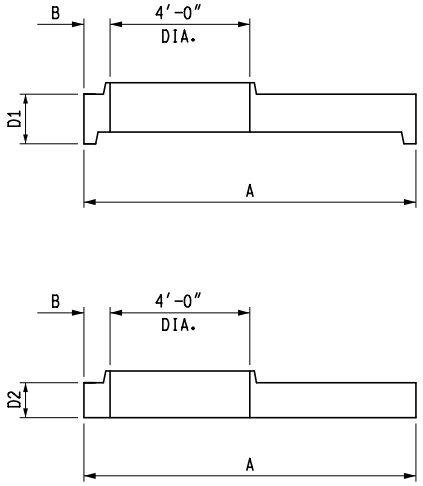

PRECAST REDUCER CAP

REDUCER CAP DIMENSIONS				
STRUCTURE DIAMETER	CAP DIAMETER "A"	B	CAP DEPTH "D1"	CAP DEPTH "D2"
7′-0″	101½″	8¾″	1′-5″	12″
8′-0″	114″	9″	1′-5″	12″
9′-0″	128″	10″	1′-5″	12″
10′-0″	140″	10″	1′-6″	12″

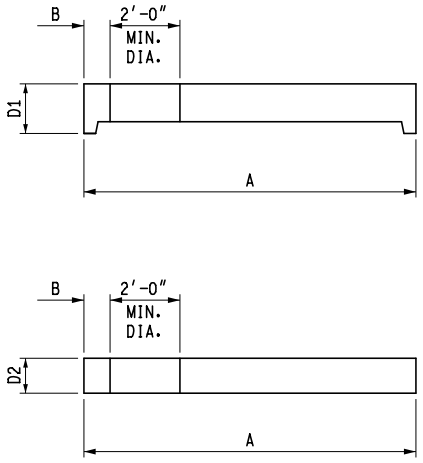

PRECAST FLAT SLAB TOP

FLAT SLAB TOP DIMENSIONS				
STRUCTURE DIAMETER	COVER DIAMETER "A"	B	COVER DEPTH "D1"	COVER DEPTH "D2"
7′-0″	101½″	8¾″	1′-5″	12″
8′-0″	114″	9″	1′-5″	12″
9′-0″	128″	10″	1′-5″	12″
10′-0″	140″	10″	1′-6″	12″

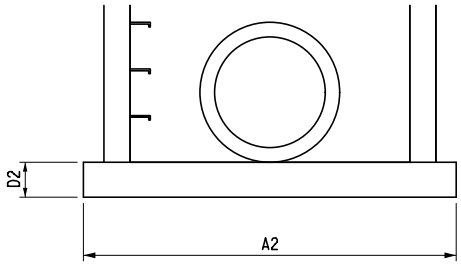

SEPARATE BASE OPTION

BASE AND RISER DIMENSIONS					
STRUCTURE DIAMETER	BASE DIAMETER "A1"	BASE DIAMETER "A2"	MIN. WALL THICKNESS "T"	BASE DEPTH "D1"	BASE DEPTH "D2"
7′-0″	101½″	108″	7″	8″	12″
8′-0″	114″	128″	8″	8″	12″
9′-0″	128″	140″	9″	8″	12″
10′-0″	140″	154″	10″	8″	12″

MICHIGAN DEPARTMENT OF TRANSPORTATION
BUREAU OF DEVELOPMENT STANDARD PLAN FOR

DRAINAGE STRUCTURES

F.H.W.A. APPROVAL	6-15-2016 PLAN DATE	R-1-G	SHEET 5 OF 9

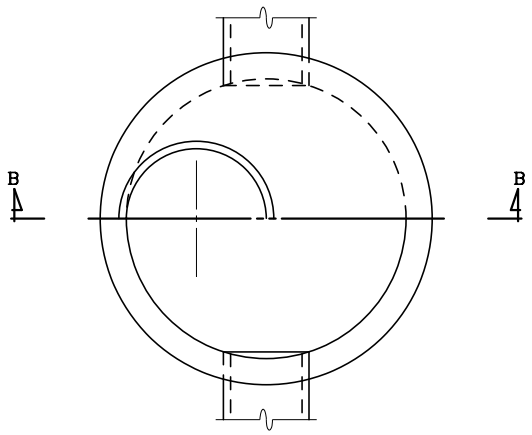

HALF SECTION A - A

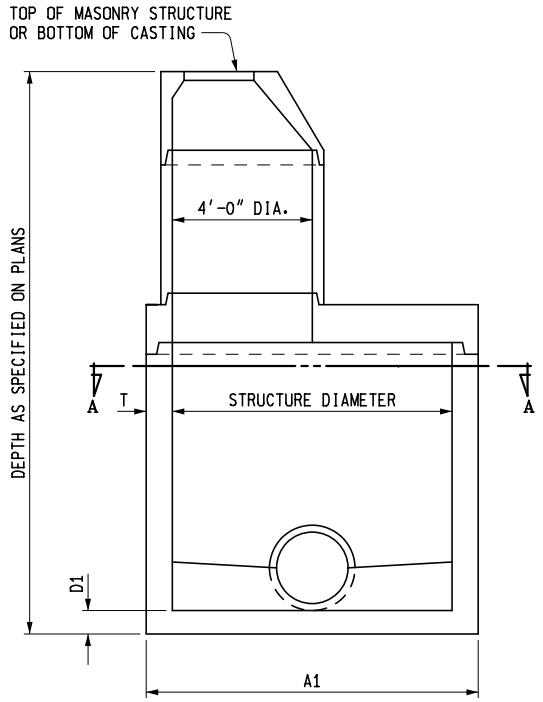

SECTION B - B
SHOWING REDUCER CAP

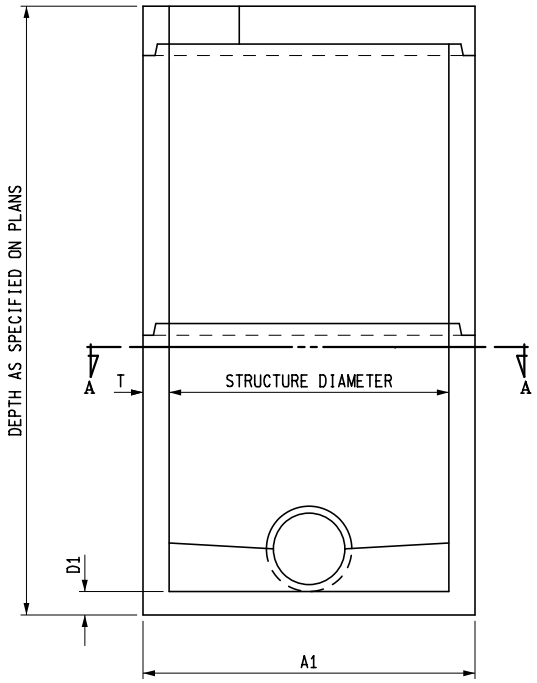

SECTION B - B
SHOWING FLAT SLAB TOP

PRECAST MANHOLE

MICHIGAN DEPARTMENT OF TRANSPORTATION
BUREAU OF DEVELOPMENT STANDARD PLAN FOR

DRAINAGE STRUCTURES

F.H.W.A. APPROVAL	6-15-2016 PLAN DATE	R-1-G	SHEET 6 OF 9

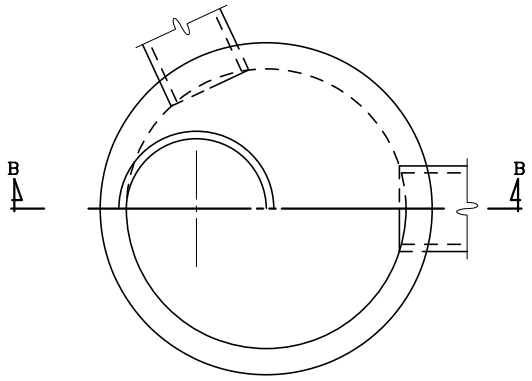

HALF SECTION A - A

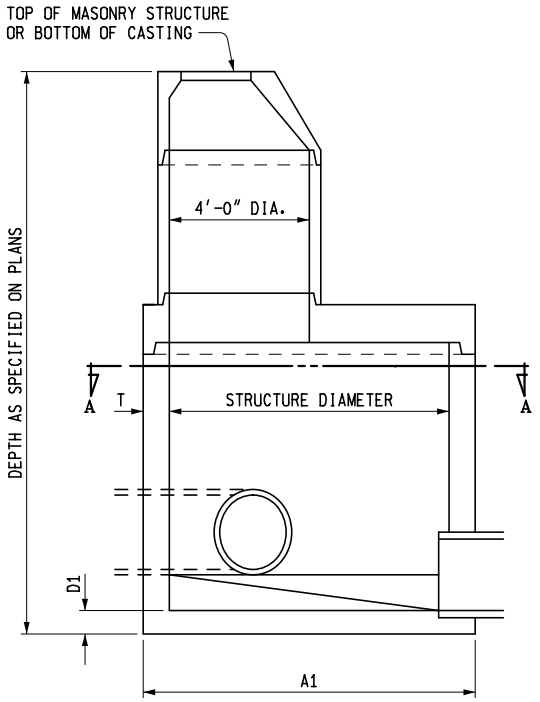

SECTION B - B
SHOWING REDUCER CAP

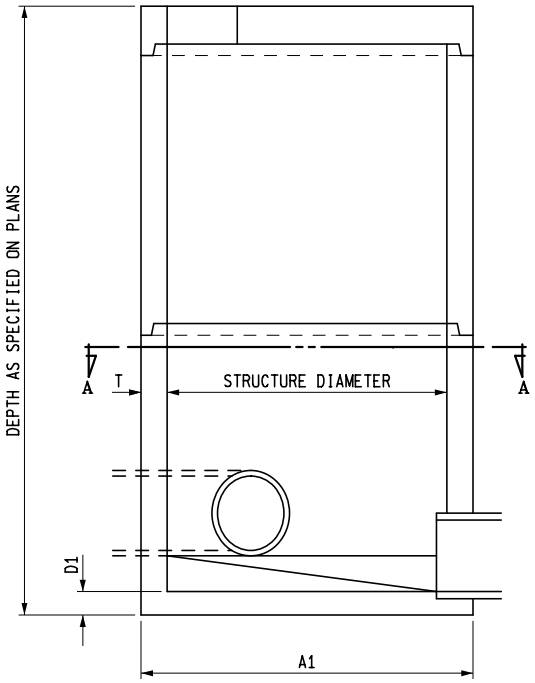

SECTION B - B
SHOWING FLAT SLAB TOP

PRECAST INLET

MICHIGAN DEPARTMENT OF TRANSPORTATION
BUREAU OF DEVELOPMENT STANDARD PLAN FOR

DRAINAGE STRUCTURES

F.H.W.A. APPROVAL	6-15-2016 PLAN DATE	R-1-G	SHEET 7 OF 9

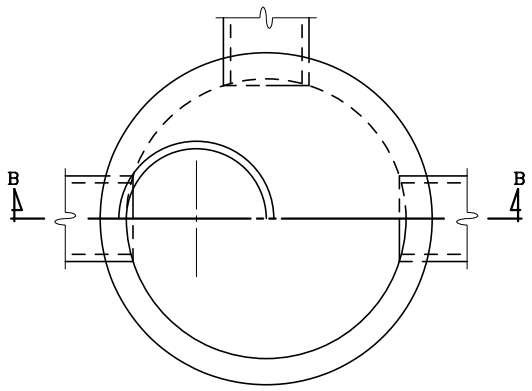

HALF SECTION A - A

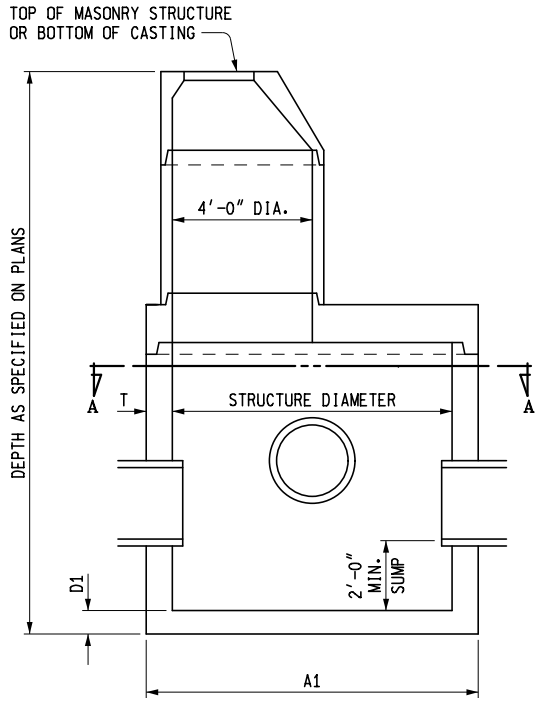

SECTION B - B
SHOWING REDUCER CAP

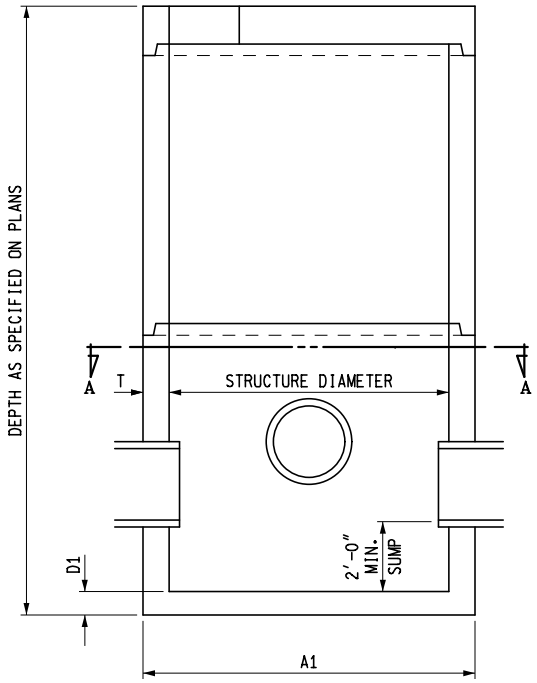

SECTION B - B
SHOWING FLAT SLAB TOP

PRECAST CATCH BASIN

MICHIGAN DEPARTMENT OF TRANSPORTATION
BUREAU OF DEVELOPMENT STANDARD PLAN FOR

DRAINAGE STRUCTURES

F.H.W.A. APPROVAL	6-15-2016 PLAN DATE	R-1-G	SHEET 8 OF 9

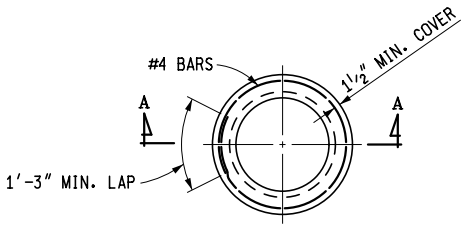

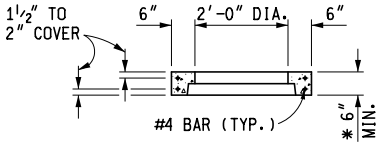

SECTION A - A

* WHEN RISER TONGUE LENGTH IS GREATER THAN 3", USE 2 TIMES THE TONGUE LENGTH.

NOTE: PRECAST RISER SHALL FULLY ENGAGE THE TONGUE OF THE RISER PIPE.

PRECAST RISER RING

(FOR 2'-0" DIAMETER STRUCTURE)

NOTES:

THE DRAINAGE STRUCTURE COVERS ALLOWED FOR USE ON THESE DRAINAGE STRUCTURES ARE SPECIFIED IN SUBSEQUENT STANDARD PLANS AND ARE INTERCHANGEABLE ON ANY STRUCTURE.

THE TOPS OF MASONRY STRUCTURES SHALL BE SUFFICIENTLY LOW TO PERMIT PROPER ADJUSTMENT OF COVER TO GRADE USING MORTAR OR BRICK AS DIRECTED BY THE ENGINEER.

PREMIUM JOINTS ARE REQUIRED ON ALL SANITARY MANHOLES. SEE ASTM DESIGNATION C-923.

GRANULAR MATERIAL CLASS III SHALL BE USED IN BACKFILLING AROUND ALL STRUCTURES THAT FALL WITHIN THE 1:1 INFLUENCE LINES FROM THE EDGE OF PAVEMENT OR BACK OF CURB.

STEPS FOR DRAINAGE STRUCTURES SHALL BE OF AN APPROVED DESIGN AND MADE FROM CAST IRON, ALUMINUM, OR PLASTIC COATED STEEL. RUNGS SHALL BE A MINIMUM OF 10" IN CLEAR LENGTH, DESIGNED TO PREVENT THE FOOT FROM SLIPPING OFF THE END. THE MINIMUM HORIZONTAL PULL OUT LOAD SHALL BE 400 LBS. THE MINIMUM VERTICAL LOAD SHALL BE 800 LBS.

THE BELL SHALL BE REMOVED FOR THE FIRST LENGTH OF OUTLET PIPE PROJECTING THROUGH THE WALL OF THE MANHOLE.

PRECAST CONCRETE SECTIONS, SUMPS, AND FLAT TOP SLABS SHALL BE BUILT ACCORDING TO CURRENT ASTM C-478 AND ACCORDING TO DETAILS SPECIFIED ON THIS PLAN. PRECAST REINFORCED CONCRETE FLAT TOP SLAB SHALL BE MARKED TO SHOW LOCATION OF REINFORCEMENT. THE WALLS OF THE PRECAST UNITS MAY HAVE A SLIGHT TAPER TO ALLOW FOR FORM REMOVAL. PRECAST CONCRETE 2'-0" DIAMETER DRAINAGE STRUCTURES SHALL HAVE A MINIMUM 3" WALL THICKNESS WITH A 6" MINIMUM BEARING SURFACE ON TOP. SEE PRECAST RISER RING FOR 2'-0" DIAMETER STRUCTURE.

THE MAXIMUM INSIDE DIAMETER OF PIPES ENTERING OR LEAVING PRECAST DRAINAGE STRUCTURES SHALL BE 2'-0" LESS THAN THE INSIDE DIAMETER OF THE DRAINAGE STRUCTURE. A PIPE LEAVING A 2'-0" DIAMETER DRAINAGE STRUCTURE IS ALLOWED TO HAVE 1'-0" INSIDE DIAMETER OR LESS.

THE NUMBER OF PIPE OPENINGS IN A RISER SHALL BE DETERMINED BY THE DESIGNER. SPACING BETWEEN OPENINGS SHALL BE 1'-0" MINIMUM. OPENINGS MAY BE CONSTRUCTED BY CASTING OR SCRIBING IN PRECAST STRUCTURES DURING FABRICATION OR BY CORING THE CURED CONCRETE.

PRECAST CONCRETE FOOTINGS OR BASES SHALL BE REINFORCED WITH #4 BARS SPACED AT 1'-0" BOTH WAYS OR WITH TWO LAYERS OF WELDED WIRE FABRIC OF EQUIVALENT CROSS SECTIONAL AREA LAID AT RIGHT ANGLES AND WIRED TOGETHER. REINFORCEMENT SHALL BE PLACED IN TOP OF FOOTING AND SHALL BE MARKED.

PRECAST CONCRETE FOOTINGS SHALL BE SUPPORTED BY A COMPACTED 6" GRANULAR SUBBASE.

THE MINIMUM WALL THICKNESS FOR ALL 2'-0", 4'-0", 5'-0", AND 6'-0" DRAINAGE STRUCTURES USING CONCRETE BLOCK, BRICK, OR CAST-IN-PLACE CONCRETE SHALL BE AS SPECIFIED IN TYPICAL WALL SECTIONS.

THE CONICAL SECTION OF MANHOLES OR CATCH BASINS CONSTRUCTED OF BLOCK OR BRICK SHALL BE SHROUDED WITH GEOTEXTILE FABRIC TO A MINIMUM DEPTH OF 5'-0" OR THROUGH THE FROST ZONE. ENOUGH GEOTEXTILE MATERIAL SHALL BE LEFT ON THE TOP (8" OR MORE) TO ROLL OVER THE TOP OF THE CONE.

PREFORMED HIGH DENSITY POLYSTYRENE FILLER PIECES MAY BE USED TO CHANNEL FLOW IN THE BOTTOM OF MANHOLES PROVIDED THEY HAVE AT LEAST 2" OF CONCRETE COVER. THE USE OF THIS MATERIAL FOR CHANNEL FLOW IS RESTRICTED TO MANHOLES WHERE THE BOTTOM SECTION IS NOT SUBJECT TO FREEZING. THE USE OF THIS MATERIAL MUST BE APPROVED BY THE ENGINEER.

MICHIGAN DEPARTMENT OF TRANSPORTATION
BUREAU OF DEVELOPMENT STANDARD PLAN FOR

DRAINAGE STRUCTURES

F.H.W.A. APPROVAL	6-15-2016 PLAN DATE	R-1-G	SHEET 9 OF 9

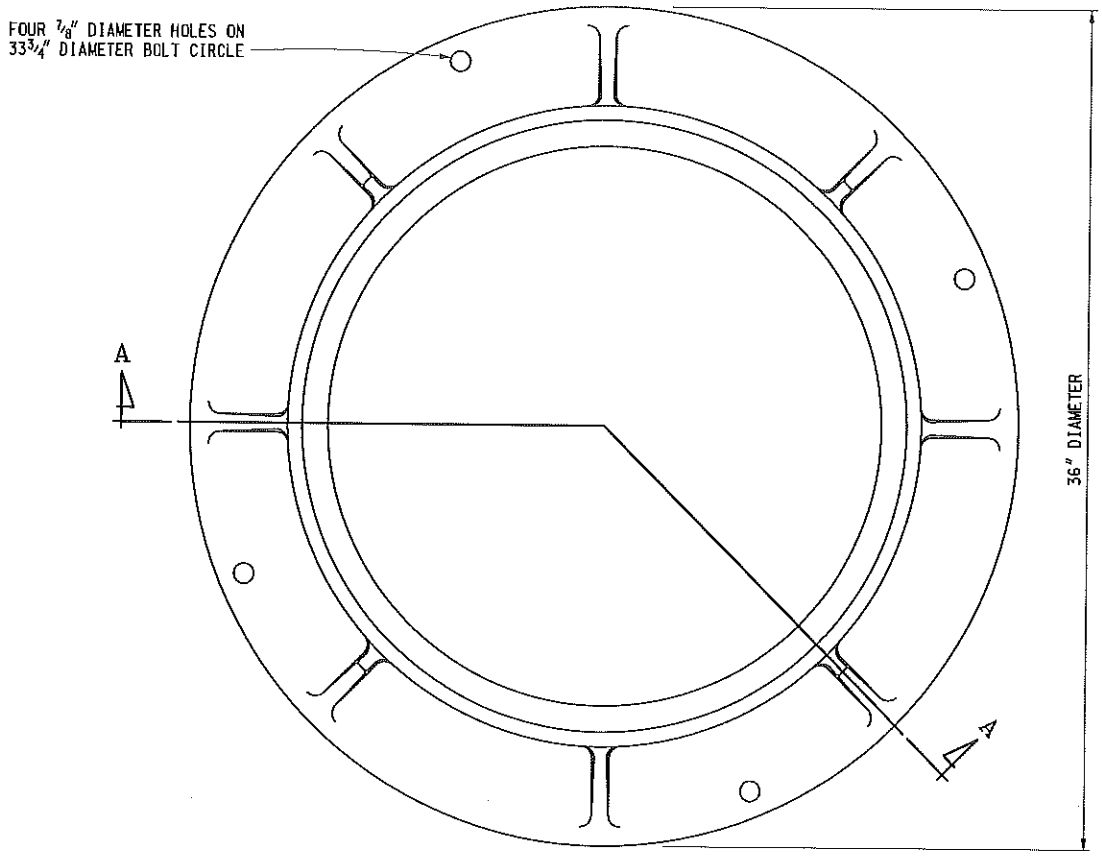

TOP VIEW OF FRAME

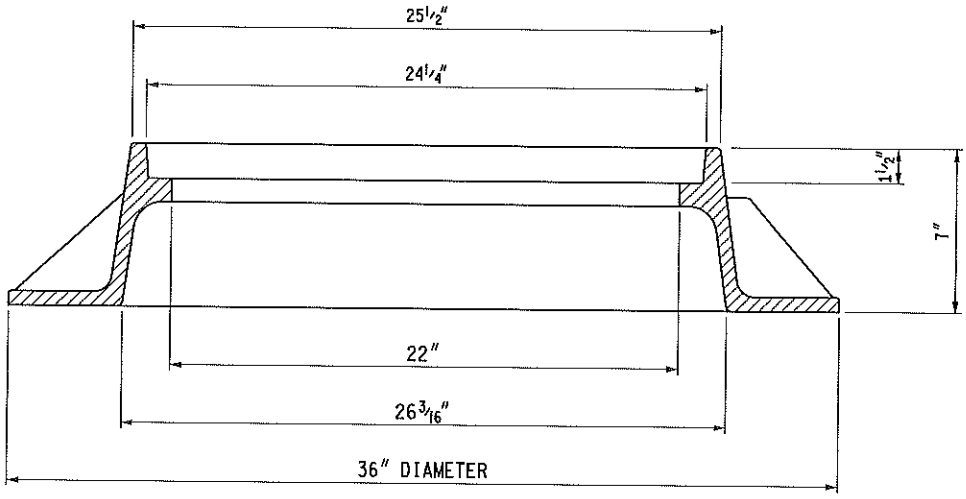

SECTION A - A

MDOT Michigan Department of Transportation PREPARED BY DESIGN DIVISION DRAWN BY: B.L.T. CHECKED BY: W.K.P.	DEPARTMENT DIRECTOR Kirk T. Steudle APPROVED BY: Randy Van Portfleet DIRECTOR, BUREAU OF FIELD SERVICES APPROVED BY: Mark A Van Port Fleet DIRECTOR, BUREAU OF HIGHWAY DEVELOPMENT	MICHIGAN DEPARTMENT OF TRANSPORTATION BUREAU OF HIGHWAY DEVELOPMENT STANDARD PLAN FOR COVER B FOR USE ON MANHOLES			
		9-30-2014 F.H.W.A. APPROVAL	3-7-2014 PLAN DATE	R-7-F	SHEET 1 OF 2

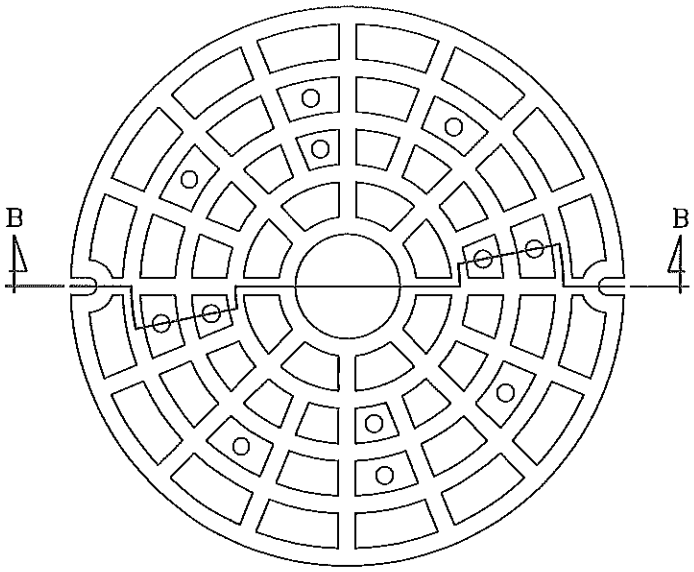

TOP VIEW OF COVER

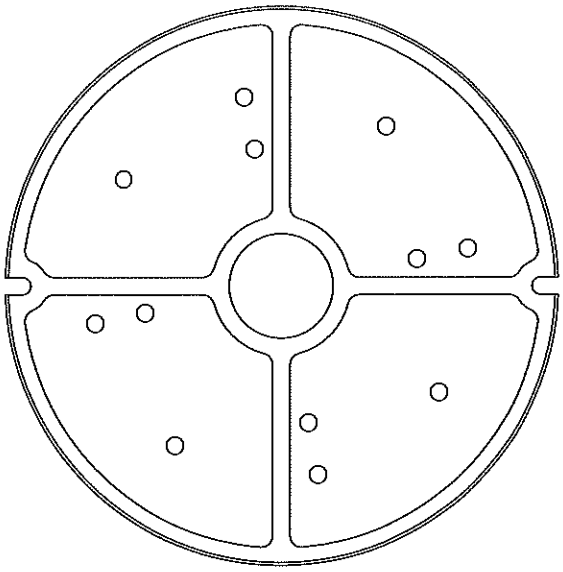

BOTTOM VIEW OF COVER

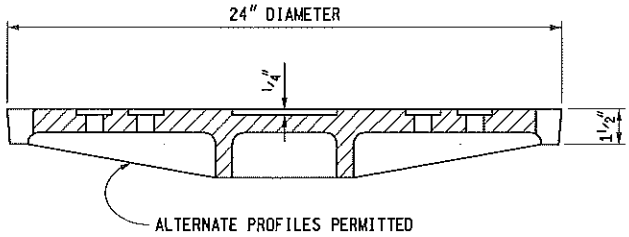

SECTION B - B

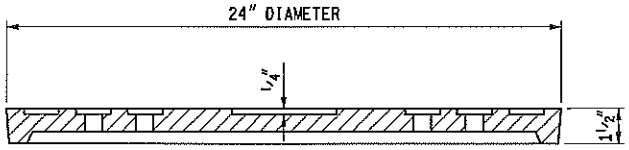

SECTION B - B

ALTERNATE PROFILE EXAMPLE

NOTES:

THE CASTINGS SHALL MEET THE REQUIREMENTS OF THE CURRENT STANDARD SPECIFICATION FOR GRAY IRON CASTINGS.

ALL CASTINGS SHALL BE CLEANED BY CURRENT APPROVED BLASTING METHODS.

THE SEATING FACE OF THE LID AND THE SEAT FOR THE SAME ON THE FRAME SHALL BE GROUND OR MACHINED SO THAT THE LID WILL HAVE AN EVEN BEARING ON ITS SEAT TO PREVENT ROCKING OR TILTING.

THE CASTINGS SHALL BE FREE OF POURING FAULTS, BLOW HOLES, CRACKS AND OTHER IMPERFECTIONS. THEY SHALL BE SOUND, TRUE TO FORM AND THICKNESS, CLEAN AND NEATLY FINISHED, AND SHALL BE COATED WITH COAL TAR PITCH VARNISH.

THIS COVER IS DESIGNED TO FIT ON ANY MANHOLE OR ON ANY EXISTING SIMILAR STRUCTURE WHEN SO DESIGNATED ON THE PLANS.

MICHIGAN DEPARTMENT OF TRANSPORTATION
BUREAU OF HIGHWAY DEVELOPMENT STANDARD PLAN FOR

COVER B

FOR USE ON MANHOLES

9-30-2014	3-7-2014	R-7-F	SHEET
F.H.W.A. APPROVAL	PLAN DATE		2 OF 2

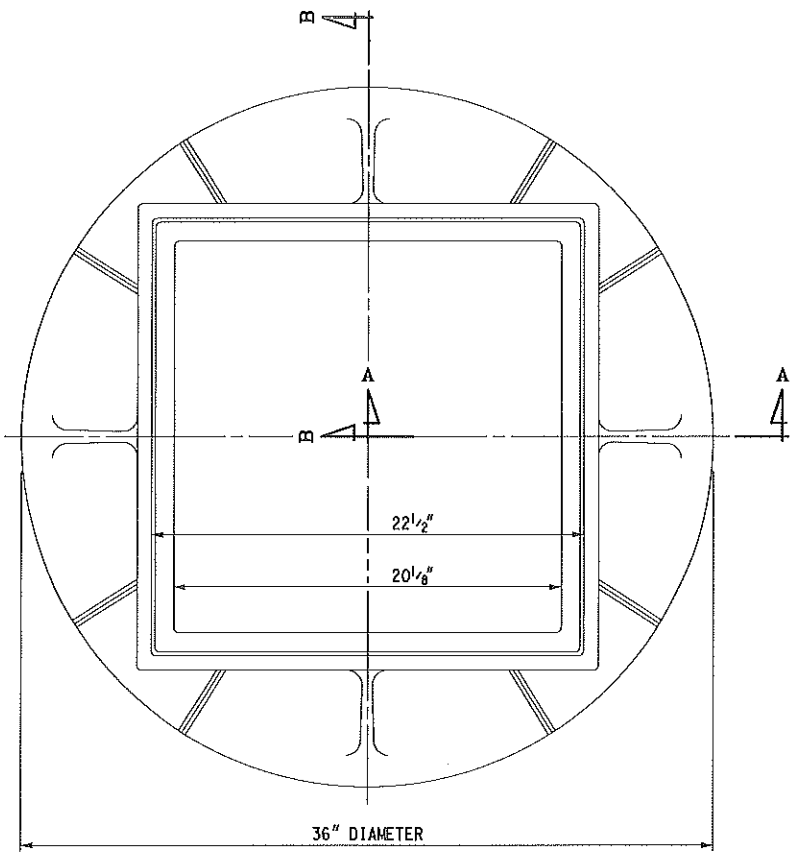

PLAN VIEW OF FRAME

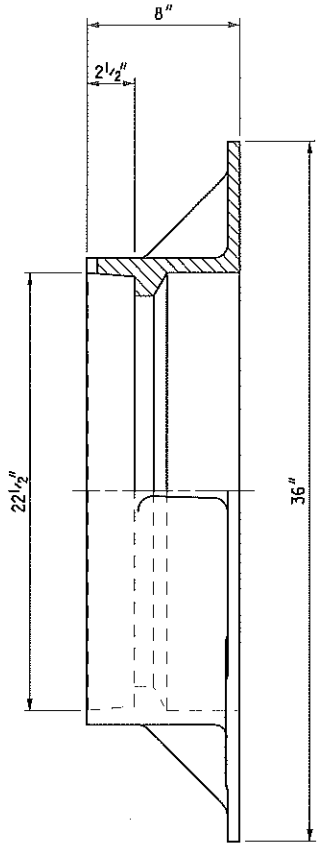

SECTION B - B

HALF FRONT ELEVATION

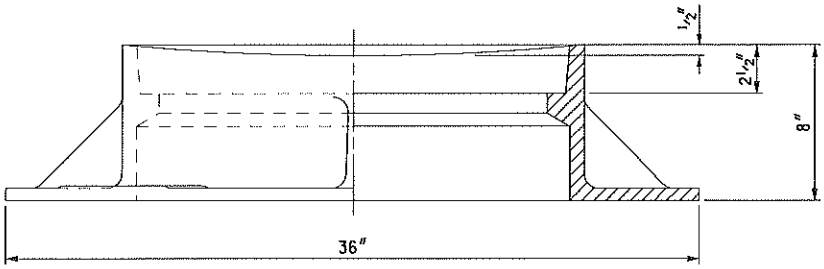

HALF SIDE ELEVATION

SECTION A - A

MDOT Michigan Department of Transportation PREPARED BY DESIGN DIVISION DRAWN BY: B.L.T. CHECKED BY: W.K.P.	DEPARTMENT DIRECTOR Kirk T. Steudle APPROVED BY: Randy Van Portfleet DIRECTOR, BUREAU OF FIELD SERVICES APPROVED BY: Mark A Van Port Fleet DIRECTOR, BUREAU OF HIGHWAY DEVELOPMENT	MICHIGAN DEPARTMENT OF TRANSPORTATION BUREAU OF HIGHWAY DEVELOPMENT STANDARD PLAN FOR COVER D FOR USE WITH STRAIGHT CURB AND CURB & GUTTER	
		9-30-2014 F.H.W.A. APPROVAL	4-29-2014 PLAN DATE	R-9-D	SHEET 1 OF 2

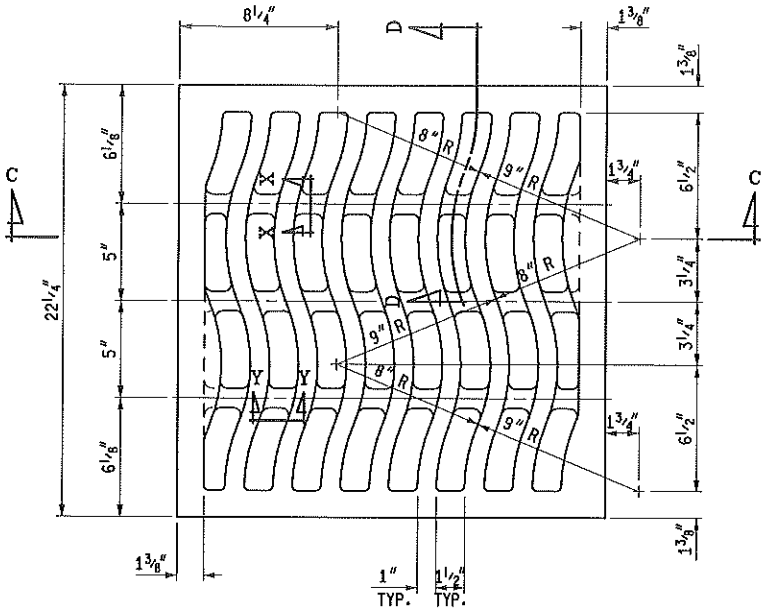

PLAN VIEW OF GRATE

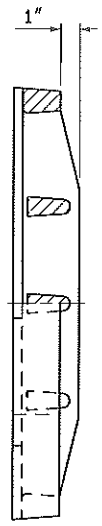

HALF FRONT ELEVATION SECTION D - D

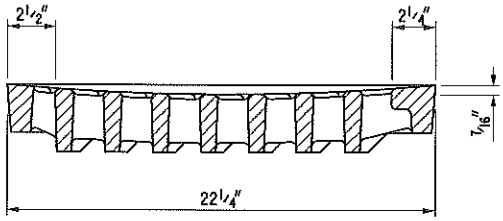

SECTION C - C

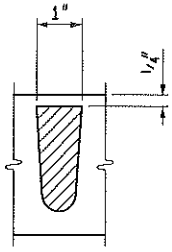

SECTION X - X

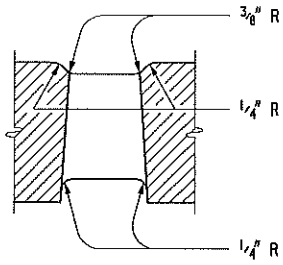

SECTION Y - Y

NOTES:

THE CASTINGS SHALL MEET THE REQUIREMENTS OF THE CURRENT STANDARD SPECIFICATION FOR GRAY IRON CASTINGS.

ALL CASTINGS SHALL BE CLEANED BY CURRENT APPROVED BLASTING METHODS.

THE SEATING FACE OF THE GRATE AND THE SEAT FOR THE SAME ON THE FRAME AND THE CURB BOX SHALL BE GROUND SO THAT THE GRATE WILL HAVE AN EVEN BEARING ON ITS SEAT TO PREVENT ROCKING OR TILTING.

THE CASTINGS SHALL BE FREE OF POURING FAULTS, BLOW HOLES, CRACKS AND OTHER IMPERFECTIONS. THEY SHALL BE SOUND, TRUE TO FORM AND THICKNESS, CLEAN AND NEATLY FINISHED, AND SHALL BE COATED WITH COAL TAR PITCH VARNISH.

THIS COVER IS DESIGNED TO FIT ON ANY INLET, CATCH BASIN OR ON ANY EXISTING SIMILAR STRUCTURE WHEN SO DESIGNATED ON THE PLANS.

MICHIGAN DEPARTMENT OF TRANSPORTATION
BUREAU OF HIGHWAY DEVELOPMENT STANDARD PLAN FOR

COVER D

FOR USE WITH
STRAIGHT CURB AND CURB & GUTTER

9-30-2014	4-29-2014	R-9-D	SHEET
F.H.W.A. APPROVAL	PLAN DATE		2 OF 2

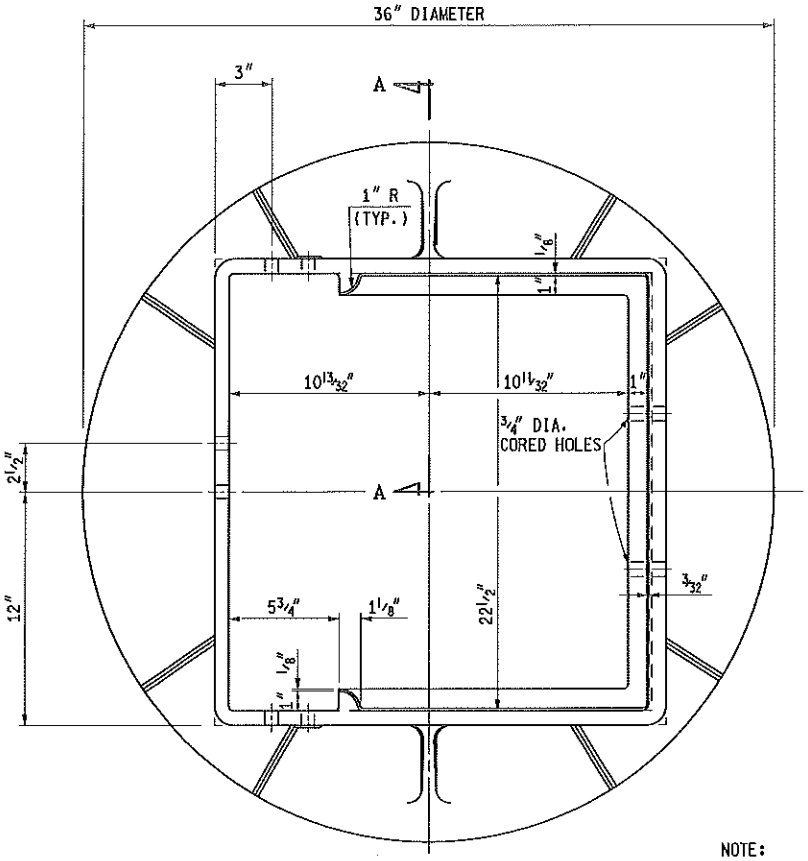

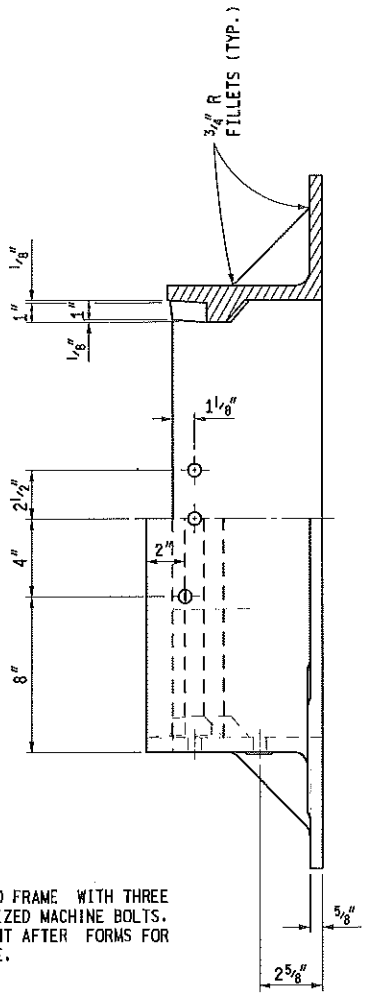

SECTION A - A
OF FRAME

HALF FRONT ELEVATION
OF FRAME

NOTE:
BOLT CURB BOX TO FRAME WITH THREE 5/8" x 2 1/2" GALVANIZED MACHINE BOLTS. ADJUST FOR HEIGHT AFTER FORMS FOR CURB ARE IN PLACE.

PLAN VIEW OF FRAME

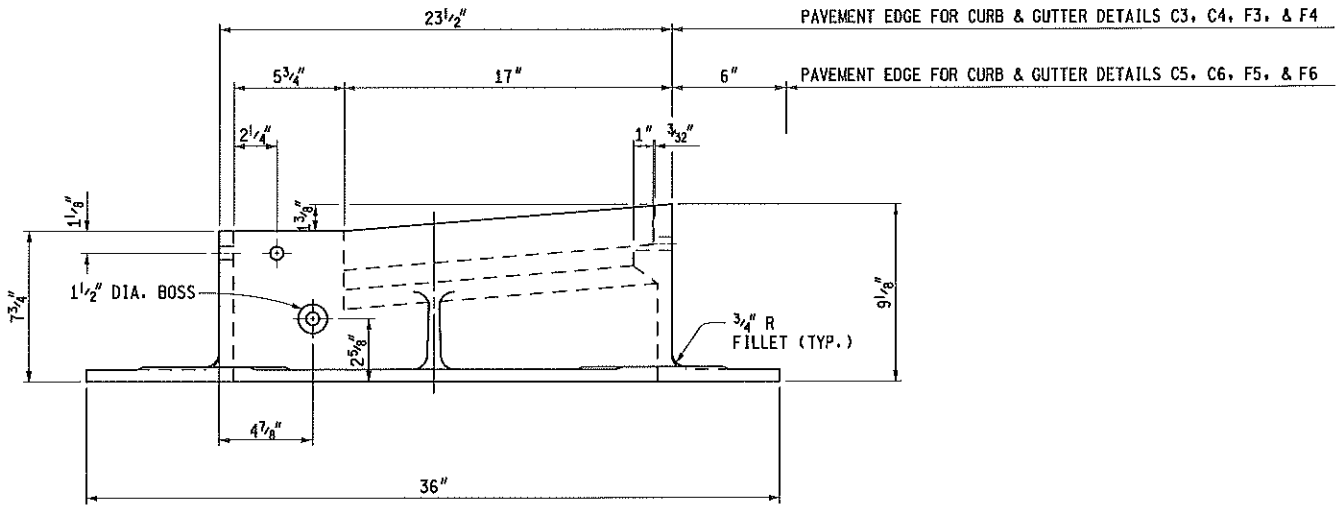

SIDE ELEVATION OF FRAME

MDOT Michigan Department of Transportation PREPARED BY DESIGN DIVISION DRAWN BY: B.L.T. CHECKED BY: W.K.P.	DEPARTMENT DIRECTOR Kirk T. Steudle APPROVED BY: Randy Van Pelt DIRECTOR, BUREAU OF FIELD SERVICES APPROVED BY: Mark A Van Port Fleet DIRECTOR, BUREAU OF HIGHWAY DEVELOPMENT	MICHIGAN DEPARTMENT OF TRANSPORTATION BUREAU OF HIGHWAY DEVELOPMENT STANDARD PLAN FOR COVER K FOR USE WITH CONCRETE CURB & GUTTER DETAILS C, E & F	
		9-30-2014 F.H.W.A. APPROVAL	4-8-2014 PLAN DATE	R-15-F	SHEET 1 OF 3

201

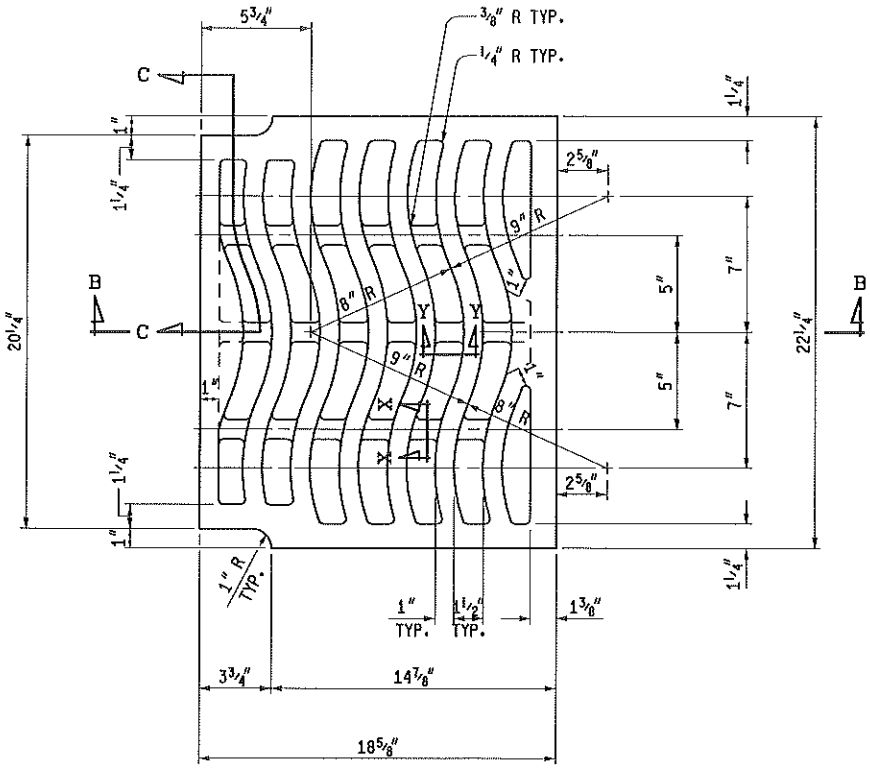

PLAN VIEW OF GRATE

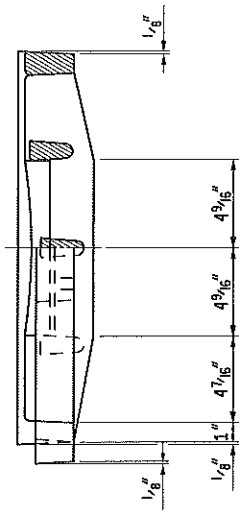

SECTION C - C OF GRATE

HALF FRONT ELEVATION OF GRATE

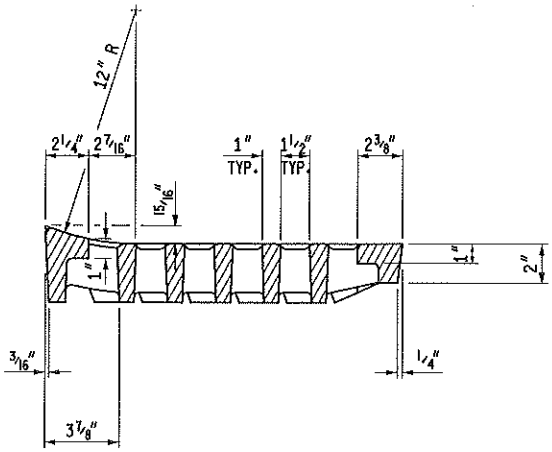

SECTION B - B

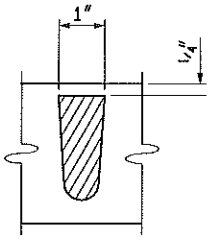

SECTION X - X

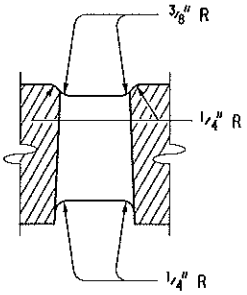

SECTION Y - Y

MICHIGAN DEPARTMENT OF TRANSPORTATION
BUREAU OF HIGHWAY DEVELOPMENT STANDARD PLAN FOR

COVER K

FOR USE WITH CONCRETE CURB & GUTTER DETAILS C, E & F

9-30-2014 F.H.W.A. APPROVAL	4-8-2014 PLAN DATE	R-15-F	SHEET 2 OF 3

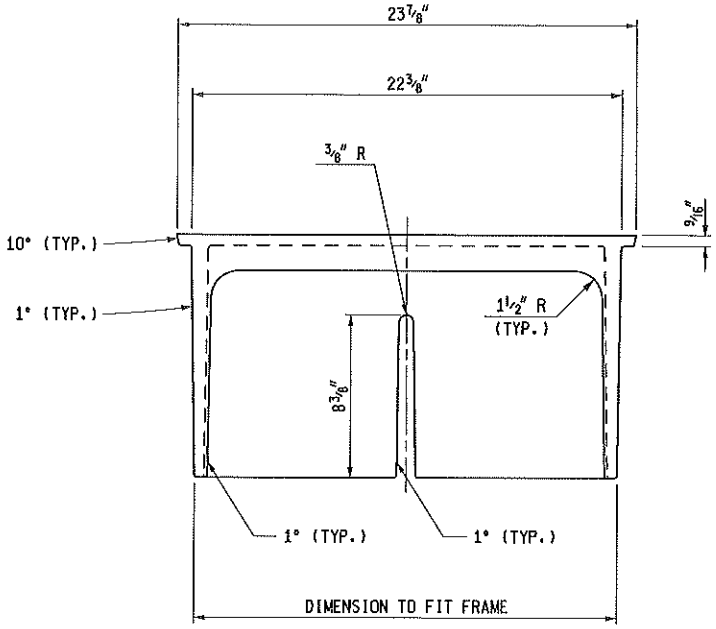

FRONT VIEW OF CURB BOX

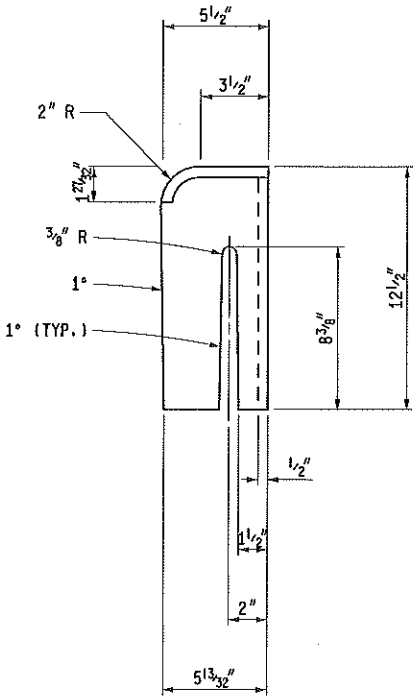

SIDE VIEW

NOTES:

THE CASTINGS SHALL MEET THE REQUIREMENTS OF THE CURRENT STANDARD SPECIFICATION FOR GRAY IRON OR DUCTILE IRON CASTINGS.

ALL CASTINGS SHALL BE CLEANED BY CURRENT APPROVED BLASTING METHODS.

THE SEATING FACE OF THE GRATE AND THE SEAT FOR THE SAME ON THE FRAME SHALL BE GROUND OR MACHINED SO THAT THE GRATE WILL HAVE AN EVEN BEARING ON ITS SEAT TO PREVENT ROCKING OR TILTING.

THE CASTINGS SHALL BE FREE OF POURING FAULTS, BLOW HOLES, CRACKS AND OTHER IMPERFECTIONS. THEY SHALL BE SOUND, TRUE TO FORM AND THICKNESS, CLEAN AND NEATLY FINISHED, AND SHALL BE COATED WITH COAL TAR PITCH VARNISH.

THE CURB BOX AND FRAME SHALL BE SHIPPED ASSEMBLED.

THIS COVER IS DESIGNED TO FIT ON ANY INLET, CATCH BASIN OR ON ANY EXISTING SIMILAR STRUCTURE WHEN SO DESIGNATED ON THE PLANS.

MICHIGAN DEPARTMENT OF TRANSPORTATION
BUREAU OF HIGHWAY DEVELOPMENT STANDARD PLAN FOR

COVER K

FOR USE WITH CONCRETE CURB & GUTTER DETAILS C, E & F

9-30-2014	4-8-2014	R-15-F	SHEET
F.H.W.A. APPROVAL	PLAN DATE		3 OF 3

* MAXIMUM LANDING SLOPE IS 2.0% IN EACH DIRECTION OF TRAVEL. LANDING MINIMUM DIMENSIONS 5′ x 5′. SEE NOTES. IF THE RAMP RUNNING SLOPE IS LESS THAN 5% A TOP LANDING IS NOT REQUIRED.

** MAXIMUM RAMP CROSS SLOPE IS 2.0%. RUNNING SLOPE 5% - 7% (8.3% MAXIMUM). SEE NOTES.

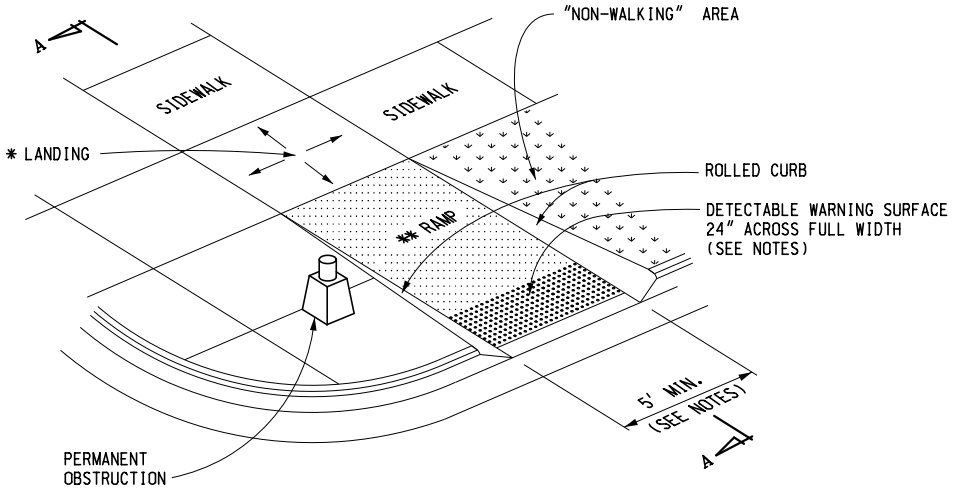

SIDEWALK RAMP TYPE R

(ROLLED SIDES)

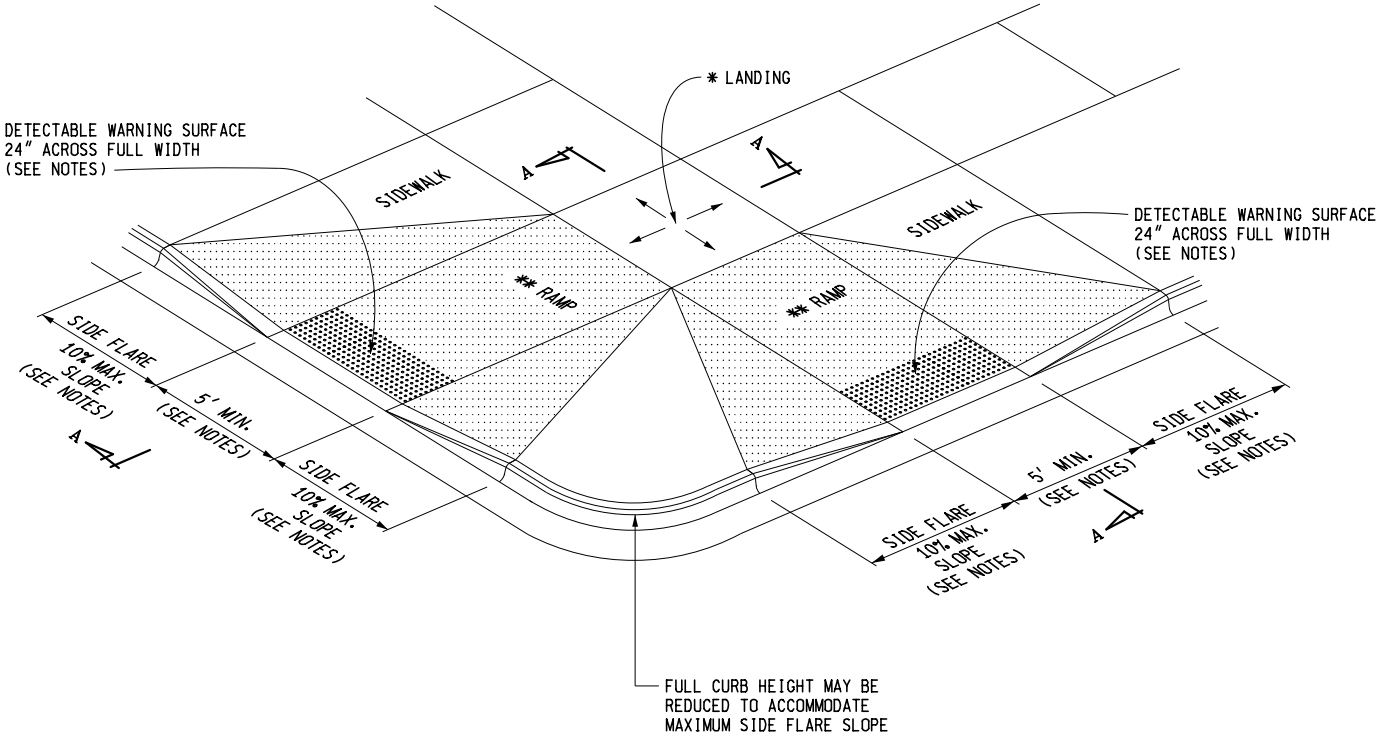

SIDEWALK RAMP TYPE F

(FLARED SIDES, TWO RAMPS SHOWN)

MDOT Michigan Department of Transportation PREPARED BY DESIGN DIVISION DRAWN BY: B.L.T. CHECKED BY: W.K.P.	DEPARTMENT DIRECTOR Kirk T. Steudle APPROVED BY: _____ DIRECTOR, BUREAU OF FIELD SERVICES APPROVED BY: _____ DIRECTOR, BUREAU OF DEVELOPMENT	MICHIGAN DEPARTMENT OF TRANSPORTATION BUREAU OF DEVELOPMENT STANDARD PLAN FOR SIDEWALK RAMP AND DETECTABLE WARNING DETAILS			
		F.H.W.A. APPROVAL	10-20-2017 PLAN DATE	R-28-J	SHEET 1 OF 7

* MAXIMUM LANDING SLOPE IS 2.0% IN EACH DIRECTION OF TRAVEL. LANDING MINIMUM DIMENSIONS 5′ x 5′. SEE NOTES. IF THE RAMP RUNNING SLOPE IS LESS THAN 5% A TOP LANDING IS NOT REQUIRED.

** MAXIMUM RAMP CROSS SLOPE IS 2.0%. RUNNING SLOPE 5% – 7% (8.3% MAXIMUM). SEE NOTES.

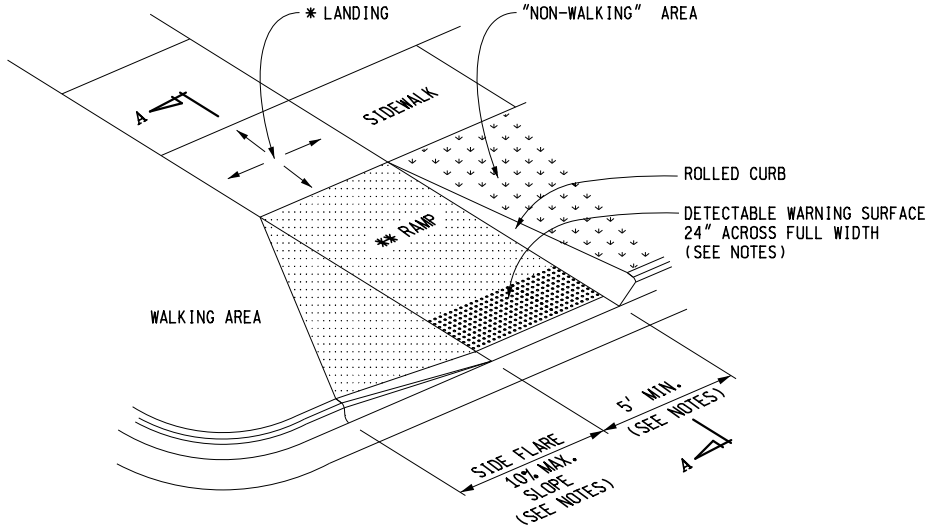

SIDEWALK RAMP TYPE RF

(ROLLED / FLARED SIDES)

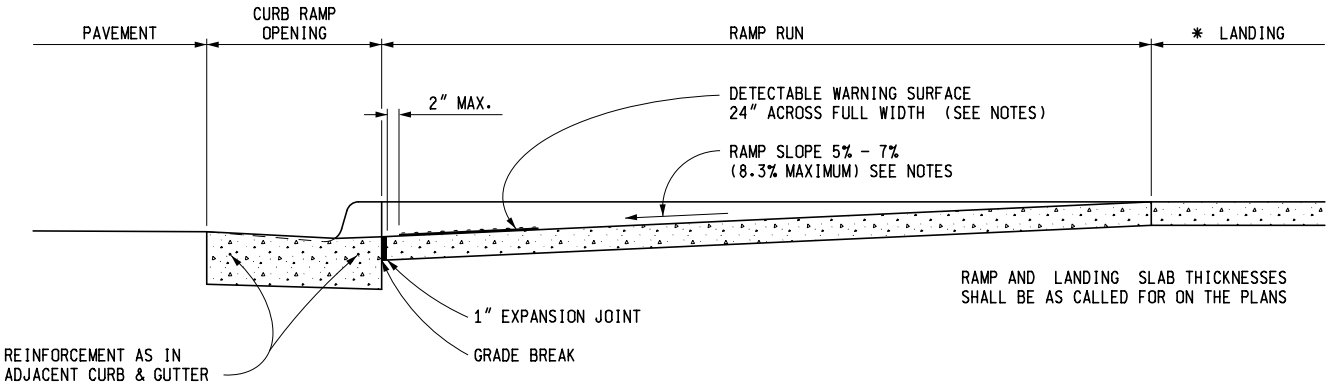

SECTION A-A

CURB TYPE	MAXIMUM RISE (INCHES)	
	A	B
B1	3/4	1
B2	3/4	1
B3	3/4	1
D1	3/4	1
D2	3/4	1
D3	3/4	1
C1	1/2	1/2
C2	1/2	1/2
C3	3/4	1/2
C4	3/4	1/2
C5	1	1/2
C6	1	1/2
F1	1/2	1/2
F2	1/2	1/2
F3	3/4	1/2
F4	3/4	1/2
F5	1	1/2
F6	1	1/2

FOR CURB TYPES SEE
STANDARD PLAN R-30-SERIES

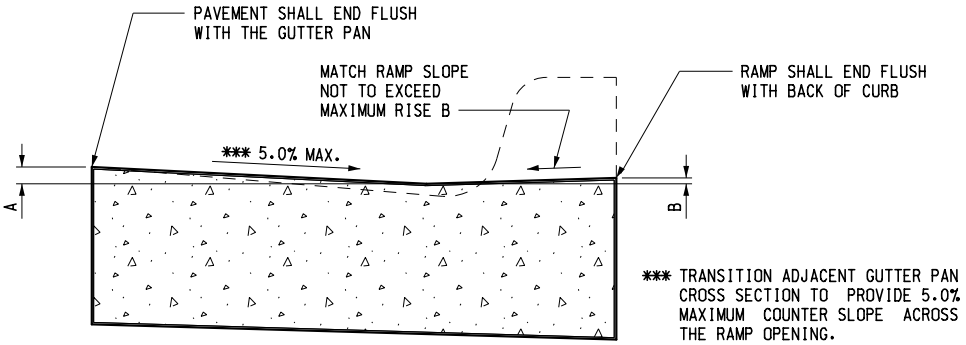

SECTION THROUGH CURB RAMP OPENING

(TYPICAL ALL RAMP TYPES)

MICHIGAN DEPARTMENT OF TRANSPORTATION
BUREAU OF DEVELOPMENT STANDARD PLAN FOR

SIDEWALK RAMP AND DETECTABLE WARNING DETAILS

F.H.W.A. APPROVAL	10-20-2017 PLAN DATE	R-28-J	SHEET 2 OF 7

* MAXIMUM LANDING SLOPE IS 2.0% IN EACH DIRECTION OF TRAVEL. LANDING MINIMUM DIMENSIONS 5′ x 5′. SEE NOTES. IF THE RAMP RUNNING SLOPE IS LESS THAN 5% A TOP LANDING IS NOT REQUIRED.

** MAXIMUM RAMP CROSS SLOPE IS 2.0%. RUNNING SLOPE 5% - 7% (8.3% MAXIMUM). SEE NOTES.

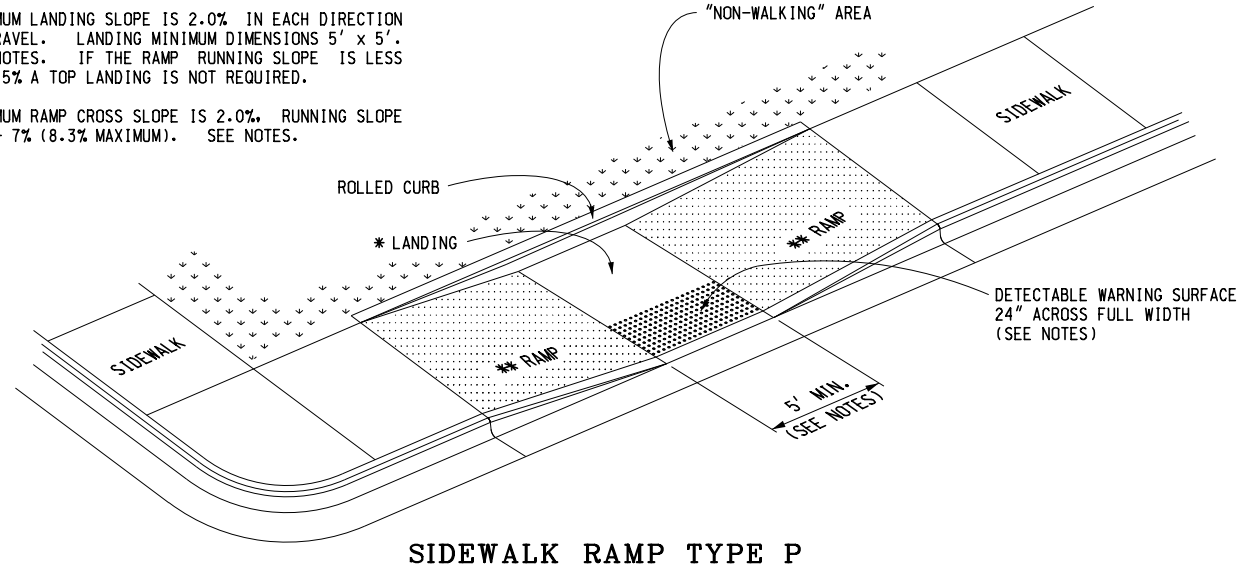

SIDEWALK RAMP TYPE P

(PARALLEL RAMP)
DO NOT USE IN AREAS WHERE PONDING MAY OCCUR

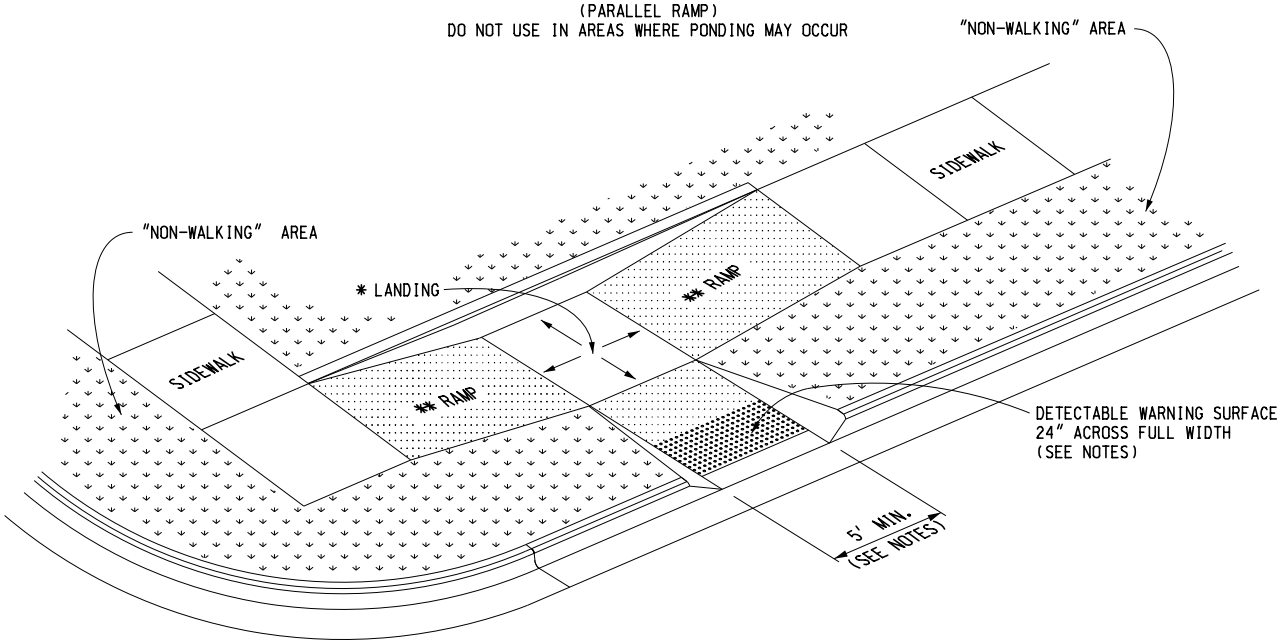

SIDEWALK RAMP TYPE C

(COMBINATION RAMP)

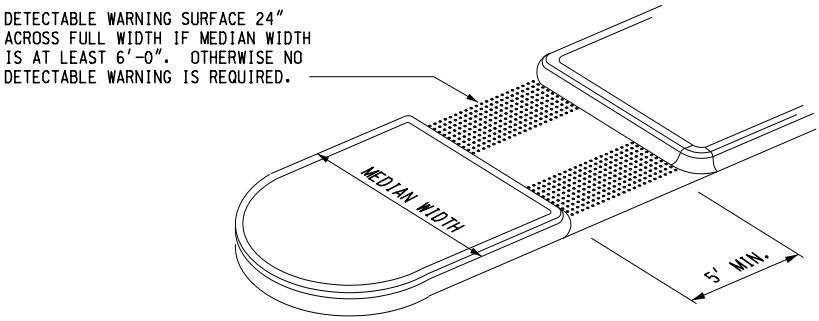

SIDEWALK RAMP TYPE M

(MEDIAN ISLAND)

MICHIGAN DEPARTMENT OF TRANSPORTATION
BUREAU OF DEVELOPMENT STANDARD PLAN FOR

SIDEWALK RAMP AND DETECTABLE WARNING DETAILS

F.H.W.A. APPROVAL	10-20-2017 PLAN DATE	R-28-J	SHEET 3 OF 7

* MAXIMUM LANDING SLOPE IS 2.0% IN EACH DIRECTION OF TRAVEL. LANDING MINIMUM DIMENSIONS 5′ x 5′. SEE NOTES. IF THE RAMP RUNNING SLOPE IS LESS THAN 5% A TOP LANDING IS NOT REQUIRED.

** MAXIMUM RAMP CROSS SLOPE IS 2.0%. RUNNING SLOPE 5% - 7% (8.3% MAXIMUM). SEE NOTES.

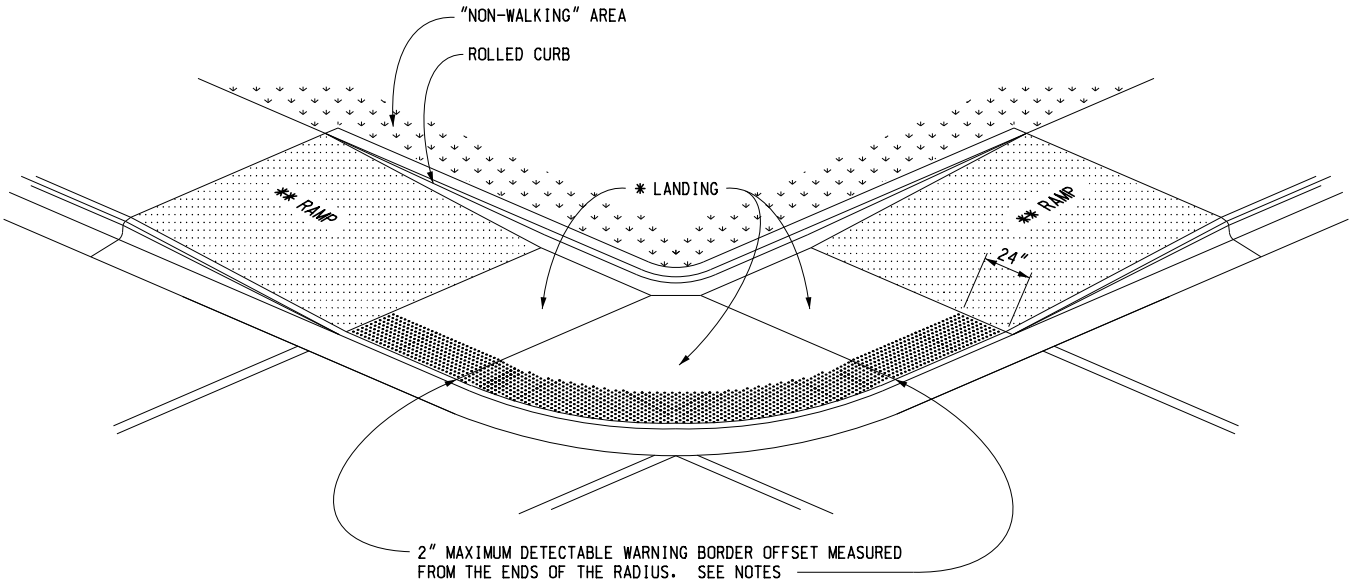

(RADIAL DETECTABLE WARNING SHOWN)

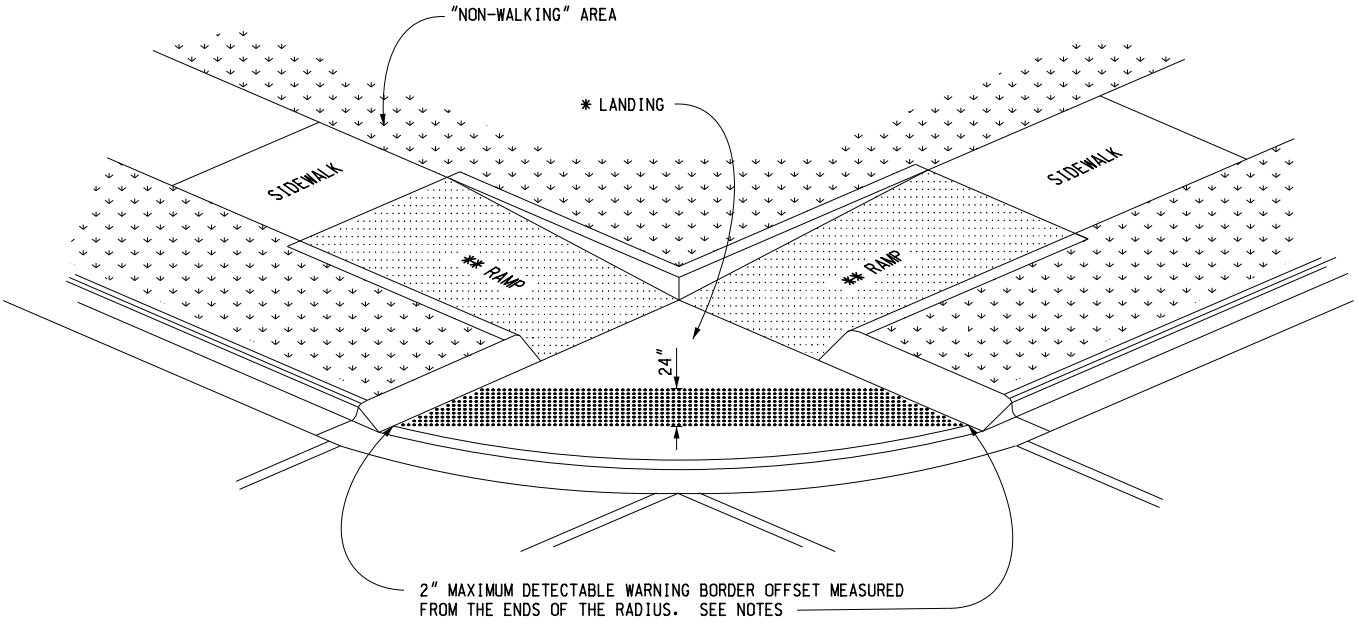

(TANGENT DETECTABLE WARNING SHOWN)

SIDEWALK RAMP TYPE D

(DEPRESSED CORNER)

USE ONLY WHEN INDEPENDENT DIRECTIONAL RAMPS CAN NOT BE CONSTRUCTED FOR EACH CROSSING DIRECTION

MICHIGAN DEPARTMENT OF TRANSPORTATION
BUREAU OF DEVELOPMENT STANDARD PLAN FOR

SIDEWALK RAMP AND DETECTABLE WARNING DETAILS

F.H.W.A. APPROVAL	10-20-2017 PLAN DATE	R-28-J	SHEET 4 OF 7

* THE DETECTABLE WARNING SURFACE SHALL BE LOCATED SO THAT THE EDGE NEAREST THE RAIL CROSSING IS 6′ MINIMUM AND 15′ MAXIMUM FROM THE CENTERLINE OF THE NEAREST RAIL. DO NOT PLACE DETECTABLE WARNING ON RAILROAD CROSSING MATERIAL.

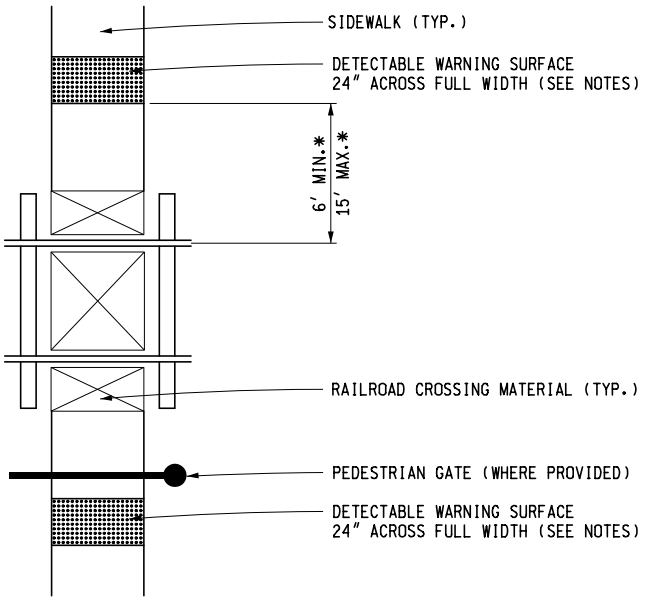

DETECTABLE WARNING AT RAILROAD CROSSING

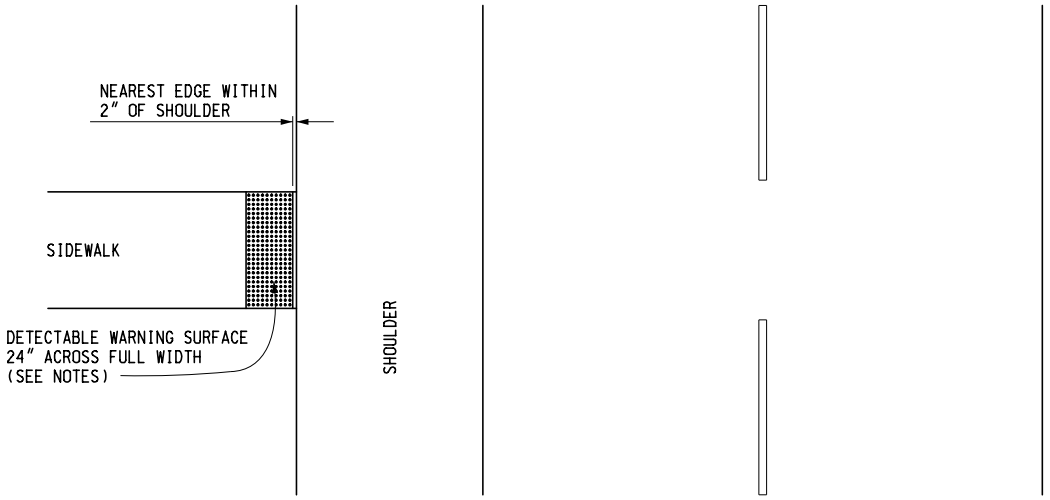

DETECTABLE WARNING AT FLUSH SHOULDER OR ROADWAY

MICHIGAN DEPARTMENT OF TRANSPORTATION
BUREAU OF DEVELOPMENT STANDARD PLAN FOR

SIDEWALK RAMP AND DETECTABLE WARNING DETAILS

F.H.W.A. APPROVAL	10-20-2017 PLAN DATE	R-28-J	SHEET 5 OF 7

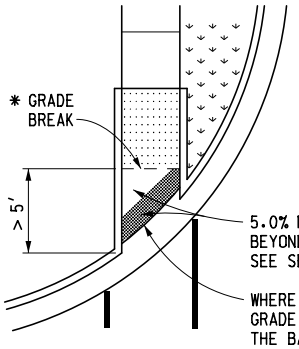

SIDEWALK RAMP LOCATED IN RADIUS (TYPE R SHOWN)
(GRADE BREAK OFFSET GREATER THAN 5')

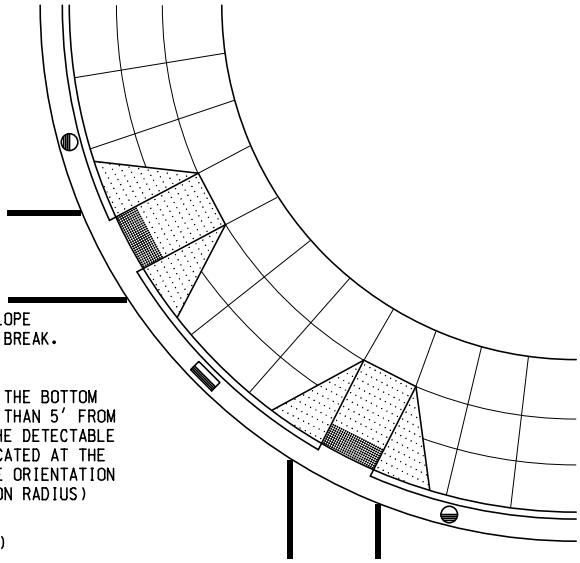

SIDEWALK RAMP PERPENDICULAR TO RADIAL CURB (TYPE F SHOWN)

(USE WITH RADIAL CURB WHEN THE CROSSWALK AND SIDEWALK RAMP ARE NOT ALIGNED)

LEGEND

- SLOPED SURFACE
- DETECTABLE WARNING
- "NON-WALKING" AREA
- CROSSWALK MARKING
- PREFERRED LOCATION OF DRAINAGE INLET (TYP.)
- ALTERNATE LOCATION OF DRAINAGE INLET (TYP.)

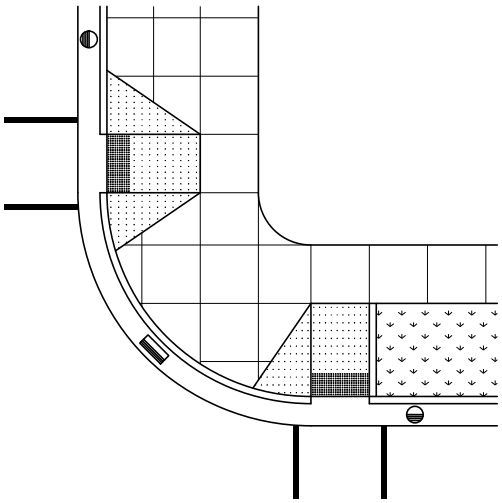

SIDEWALK RAMP PERPENDICULAR TO TANGENT CURB
(TYPE F AND TYPE RF SHOWN)

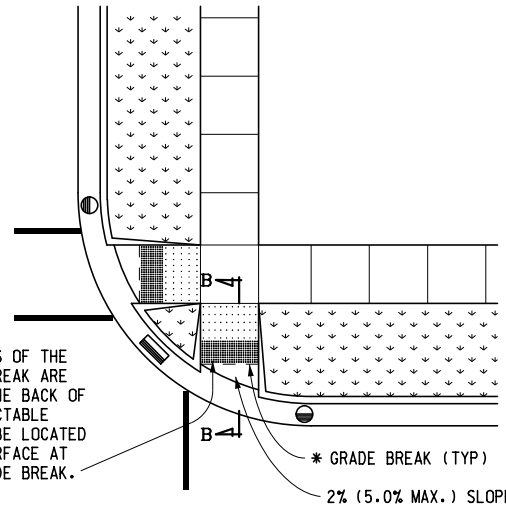

SIDEWALK RAMP LOCATED IN RADIUS (TYPE R SHOWN)
(GRADE BREAK OFFSET LESS THAN 5')

* GRADE BREAKS AT THE TOP AND BOTTOM OF CURB RAMPS SHALL BE PERPENDICULAR TO THE DIRECTION OF TRAVEL.

*** TRANSITION ADJACENT GUTTER PAN CROSS SECTION TO PROVIDE 5.0% MAXIMUM COUNTER SLOPE ACROSS THE RAMP OPENING.

SEE SHEET 2 FOR CURB RAMP OPENING DETAILS.

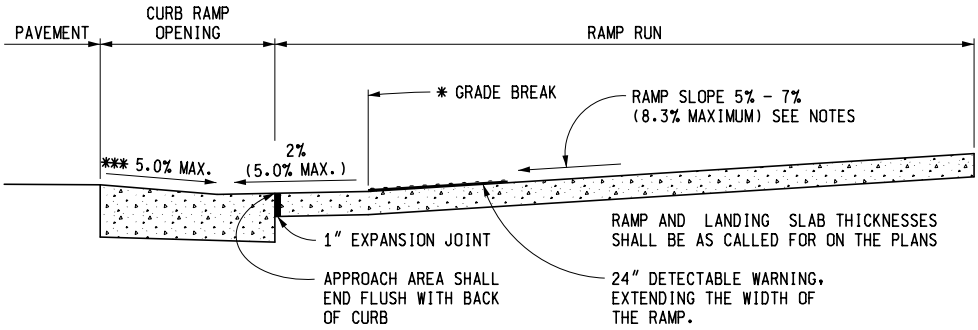

SECTION B-B

SIDEWALK RAMP ORIENTATION

MICHIGAN DEPARTMENT OF TRANSPORTATION
BUREAU OF DEVELOPMENT STANDARD PLAN FOR

SIDEWALK RAMP AND DETECTABLE WARNING DETAILS

F.H.W.A. APPROVAL	10-20-2017 PLAN DATE	R-28-J	SHEET 6 OF 7

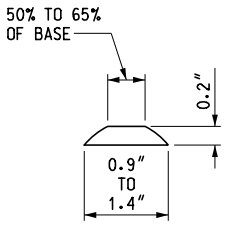

DOME SECTION

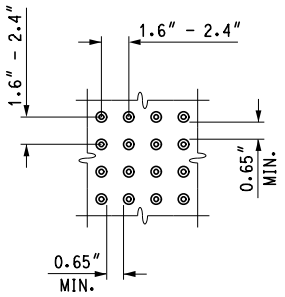

DOME SPACING

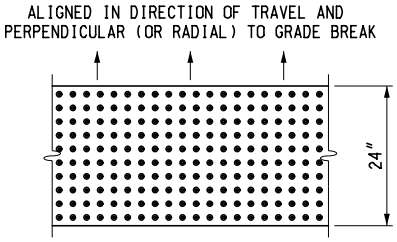

DOME ALIGNMENT

DETECTABLE WARNING DETAILS

NOTES:

DETAILS SPECIFIED ON THIS PLAN APPLY TO ALL CONSTRUCTION, RECONSTRUCTION, OR ALTERATION OF STREETS, CURBS, OR SIDEWALKS IN THE PUBLIC RIGHT OF WAY.

SIDEWALK RAMPS ARE TO BE LOCATED AS SPECIFIED ON THE PLANS OR AS DIRECTED BY THE ENGINEER.

RAMPS SHALL BE PROVIDED AT ALL CORNERS OF AN INTERSECTION WHERE THERE IS EXISTING OR PROPOSED SIDEWALK AND CURB. RAMPS SHALL ALSO BE PROVIDED AT MARKED AND/OR SIGNALIZED MID-BLOCK CROSSINGS.

SURFACE TEXTURE OF THE RAMP SHALL BE THAT OBTAINED BY A COARSE BROOMING, TRANSVERSE TO THE RUNNING SLOPE.

SIDEWALK SHALL BE RAMPED WHERE THE DRIVEWAY CURB IS EXTENDED ACROSS THE WALK.

CARE SHALL BE TAKEN TO ASSURE A UNIFORM GRADE ON THE RAMP. WHERE CONDITIONS PERMIT, IT IS DESIRABLE THAT THE SLOPE OF THE RAMP BE IN ONLY ONE DIRECTION, PARALLEL TO THE DIRECTION OF TRAVEL.

RAMP WIDTH SHALL BE INCREASED, IF NECESSARY, TO ACCOMMODATE SIDEWALK SNOW REMOVAL EQUIPMENT NORMALLY USED BY THE MUNICIPALITY.

WHEN 5' MINIMUM WIDTHS ARE NOT PRACTICABLE, RAMP WIDTH MAY BE REDUCED TO NOT LESS THAN 4' AND LANDINGS TO NOT LESS THAN 4' x 4'.

DETECTABLE WARNING SURFACE COVERAGE IS 24" MINIMUM IN THE DIRECTION OF RAMP/PATH TRAVEL AND THE FULL WIDTH OF THE RAMP/PATH OPENING EXCLUDING CURBED OR FLARED CURB TRANSITION AREAS. A BORDER OFFSET NOT GREATER THAN 2" MEASURED ALONG THE EDGES OF THE DETECTABLE WARNING IS ALLOWABLE. FOR RADIAL CURB THE OFFSET IS MEASURED FROM THE ENDS OF THE RADIUS.

FOR NEW ROADWAY CONSTRUCTION, THE RAMP CROSS SLOPE MAY NOT EXCEED 2.0%. FOR ALTERATIONS TO EXISTING ROADWAYS, THE CROSS SLOPE MAY BE TRANSITIONED TO MEET AN EXISTING ROADWAY GRADE. THE CROSS SLOPE TRANSITION SHALL BE APPLIED UNIFORMLY OVER THE FULL LENGTH OF THE RAMP.

THE MAXIMUM RUNNING SLOPE OF 8.3% IS RELATIVE TO A FLAT (0%) REFERENCE. HOWEVER, IT SHALL NOT REQUIRE ANY RAMP OR SERIES OF RAMPS TO EXCEED 15 FEET IN LENGTH NOT INCLUDING LANDINGS OR TRANSITIONS.

DRAINAGE STRUCTURES SHOULD NOT BE PLACED IN LINE WITH RAMPS. THE LOCATION OF THE RAMP SHOULD TAKE PRECEDENCE OVER THE LOCATION OF THE DRAINAGE STRUCTURE. WHERE EXISTING DRAINAGE STRUCTURES ARE LOCATED IN THE RAMP PATH OF TRAVEL, USE A MANUFACTURER'S ADA COMPLIANT GRATE. OPENINGS SHALL NOT BE GREATER THAN ½". ELONGATED OPENINGS SHALL BE PLACED SO THAT THE LONG DIMENSION IS PERPENDICULAR TO THE DOMINANT DIRECTION OF TRAVEL.

THE TOP OF THE JOINT FILLER FOR ALL RAMP TYPES SHALL BE FLUSH WITH THE ADJACENT CONCRETE.

CROSSWALK AND STOP LINE MARKINGS, IF USED, SHALL BE SO LOCATED AS TO STOP TRAFFIC SHORT OF RAMP CROSSINGS. SPECIFIC DETAILS FOR MARKING APPLICATIONS ARE GIVEN IN THE "MICHIGAN MANUAL ON UNIFORM TRAFFIC CONTROL DEVICES".

FLARED SIDES WITH A SLOPE OF 10% MAXIMUM, MEASURED ALONG THE ROADSIDE CURB LINE, SHALL BE PROVIDED WHERE AN UNOBSTRUCTED CIRCULATION PATH LATERALLY CROSSES THE SIDEWALK RAMP. FLARED SIDES ARE NOT REQUIRED WHERE THE RAMP IS BORDERED BY LANDSCAPING, UNPAVED SURFACE OR PERMANENT FIXED OBJECTS. WHERE THEY ARE NOT REQUIRED, FLARED SIDES CAN BE CONSIDERED IN ORDER TO AVOID SHARP CURB RETURNS AT RAMP OPENINGS.

DETECTABLE WARNING PLATES MUST BE INSTALLED USING FABRICATED OR FIELD CUT UNITS CAST AND/OR ANCHORED IN THE PAVEMENT TO RESIST SHIFTING OR HEAVING.

MICHIGAN DEPARTMENT OF TRANSPORTATION
BUREAU OF DEVELOPMENT STANDARD PLAN FOR

SIDEWALK RAMP AND DETECTABLE WARNING DETAILS

F.H.W.A. APPROVAL	10-20-2017 PLAN DATE	R-28-J	SHEET 7 OF 7

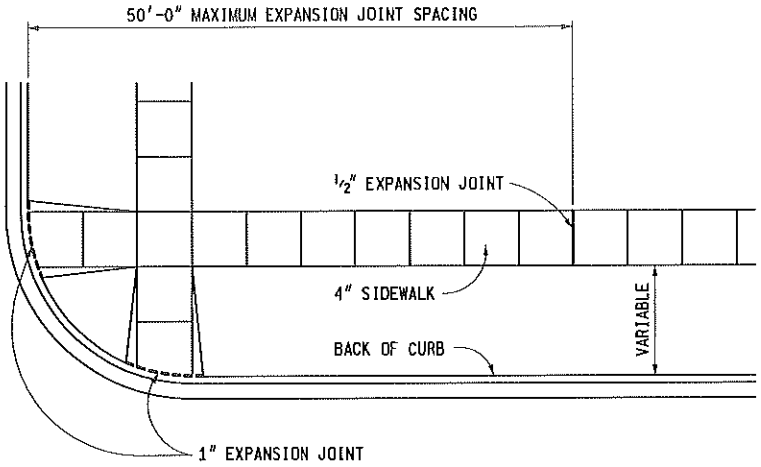

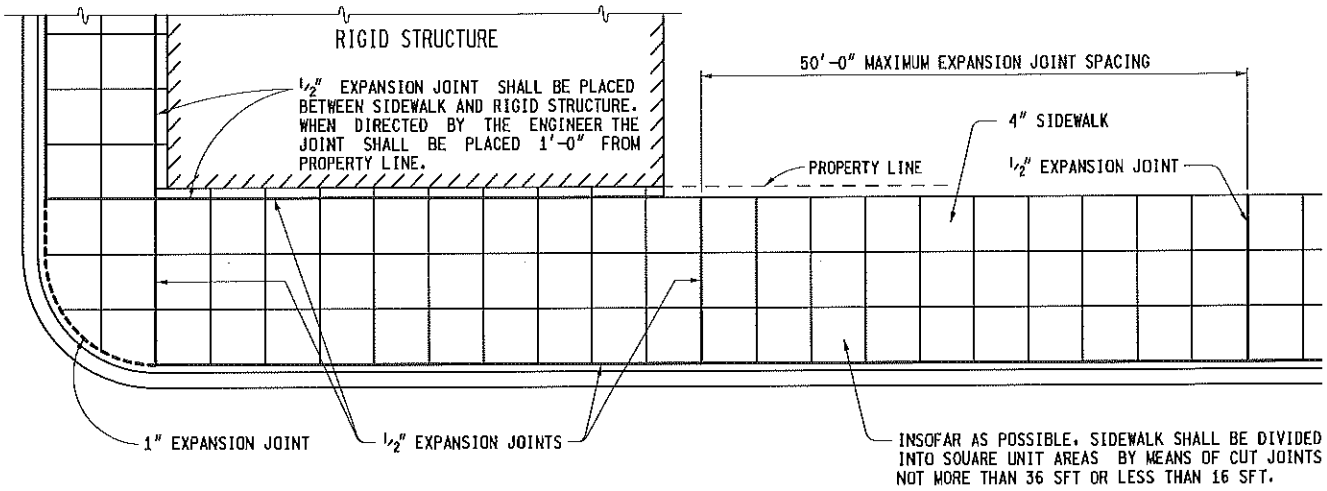

LOCATION OF JOINTS IN CONCRETE SIDEWALK

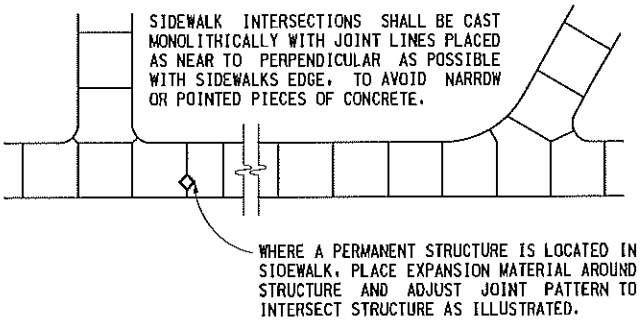

TYPICAL SIDEWALK JOINT LAYOUTS

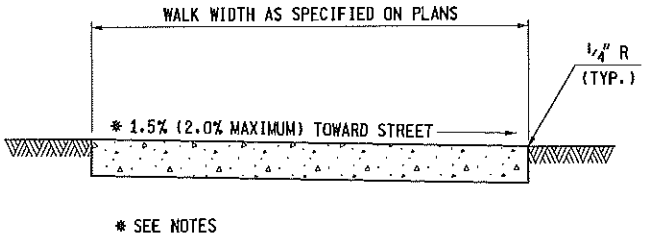

4" CONCRETE SIDEWALK

MDOT Michigan Department of Transportation

PREPARED BY DESIGN DIVISION

DRAWN BY: B.L.T.

CHECKED BY: W.K.P.

DEPARTMENT DIRECTOR
Kirk T. Steudle

APPROVED BY: Randy Van Portfleet
DIRECTOR, BUREAU OF FIELD SERVICES

APPROVED BY: Mark A Van Port Fleet
DIRECTOR, BUREAU OF HIGHWAY DEVELOPMENT

MICHIGAN DEPARTMENT OF TRANSPORTATION
BUREAU OF HIGHWAY DEVELOPMENT STANDARD PLAN FOR

DRIVEWAY OPENINGS & APPROACHES, AND CONCRETE SIDEWALK

9-30-2014	7-1-2014	R-29-I	SHEET
F.H.W.A. APPROVAL	PLAN DATE		1 OF 4

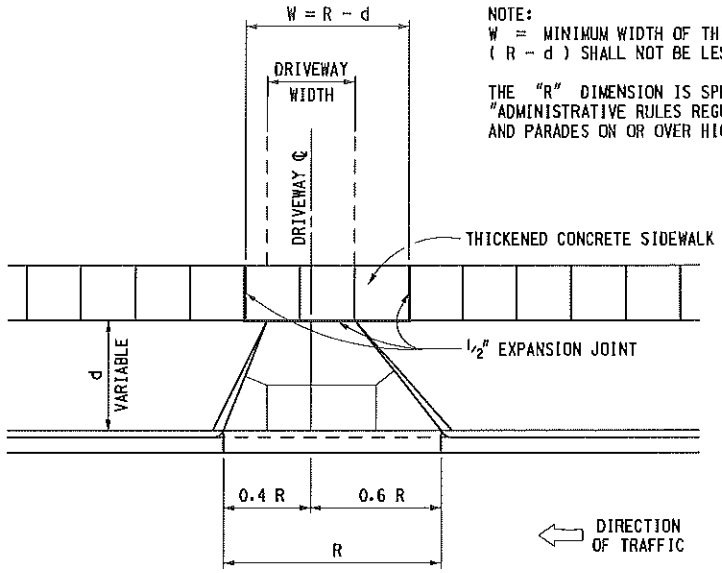

NOTE:
W = MINIMUM WIDTH OF THICKENED CONCRETE SIDEWALK.
(R - d) SHALL NOT BE LESS THAN DRIVEWAY WIDTH.

THE "R" DIMENSION IS SPECIFIED IN THE PUBLICATION "ADMINISTRATIVE RULES REGULATING DRIVEWAYS, BANNERS AND PARADES ON OR OVER HIGHWAYS".

CONCRETE DRIVEWAY OPENING LAYOUT

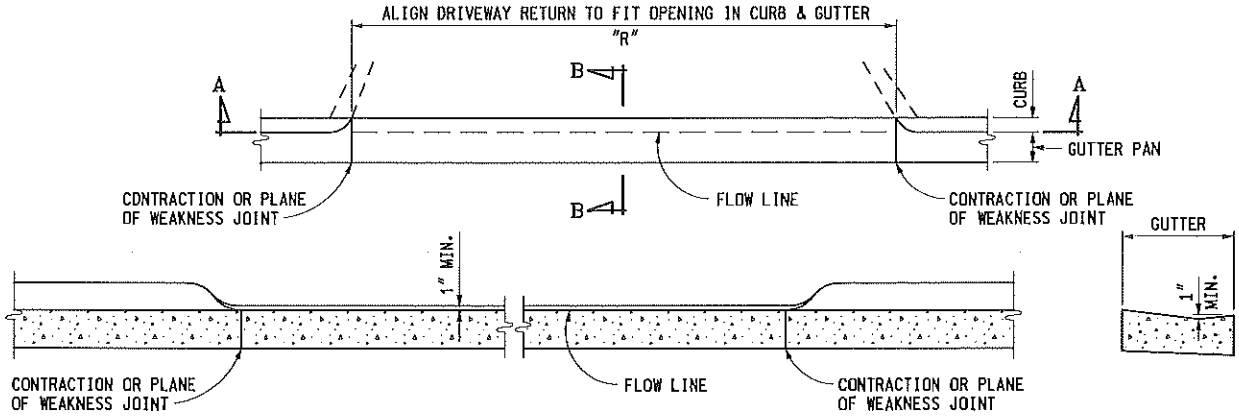

SECTION A - A

SECTION B - B

CONCRETE DRIVEWAY OPENING, DETAIL L

** TO FRONT EDGE OF GUTTER PAN

*** USE "W" JOINT IF THE DRIVEWAY AND CURB ARE POURED MONOLITHICALLY OR SYMBOL "B" JOINT IF THEY ARE POURED IN STAGES.

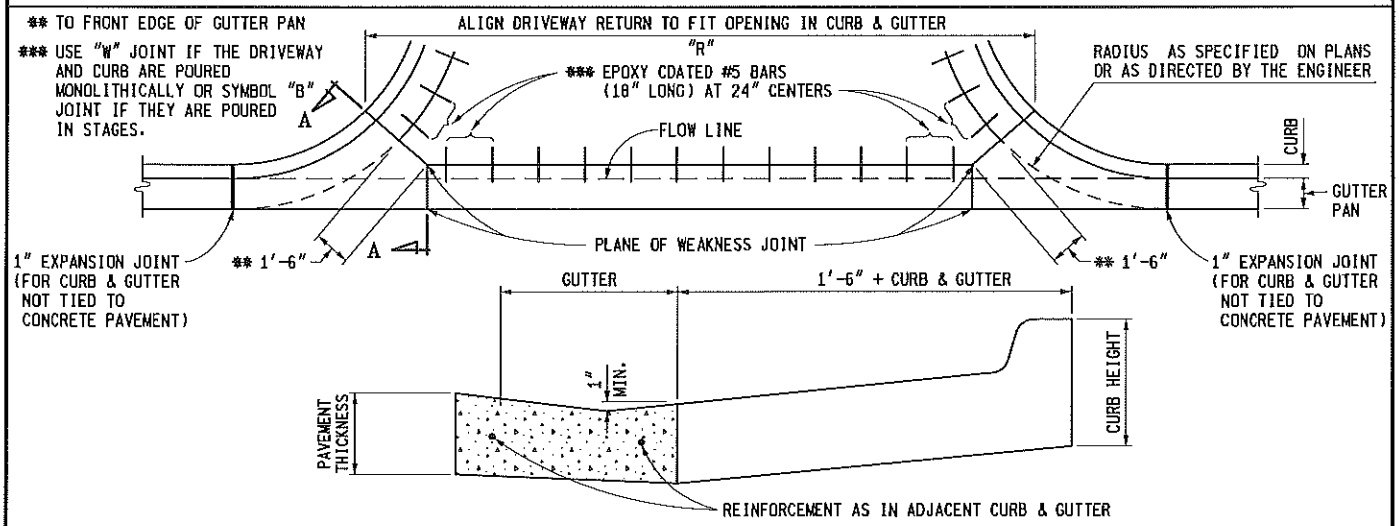

SECTION A - A

CONCRETE DRIVEWAY OPENING, DETAIL M

NOTE:
FOR ROADWAYS WITH CONCRETE PAVEMENTS, LONGITUDINAL LANE TIES WILL BE CONTINUOUS THRDUGH THE DRIVEWAY OPENING AND THE SPACING OF THE #5 BARS IN CONCRETE DRIVEWAYS SHALL BE ADJUSTED TO AVOID CONFLICT WITH THE LONGITUDINAL LANE TIES.

MICHIGAN DEPARTMENT OF TRANSPORTATION
BUREAU OF HIGHWAY DEVELOPMENT STANDARD PLAN FOR

DRIVEWAY OPENINGS & APPROACHES, AND CONCRETE SIDEWALK

9-30-2014	7-1-2014	R-29-I	SHEET
F.H.W.A. APPROVAL	PLAN DATE		2 OF 4

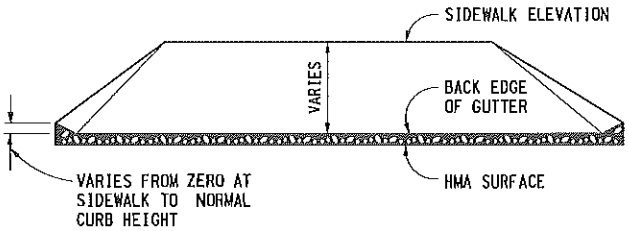

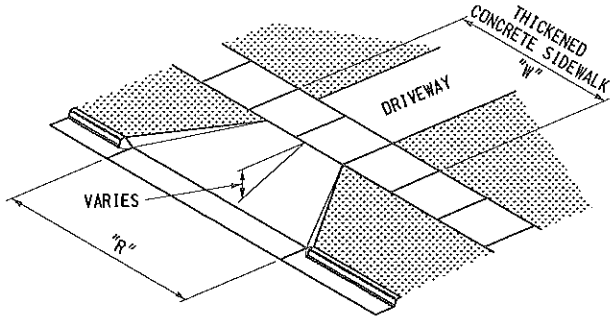

HMA DRIVEWAY APPROACH

(TO BE USED WITH DETAIL L)

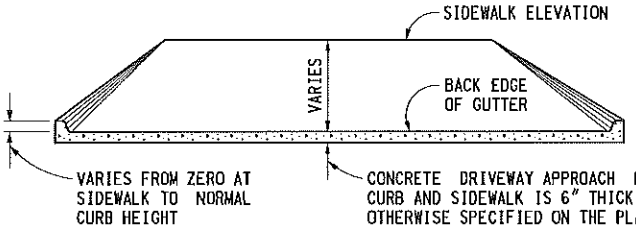

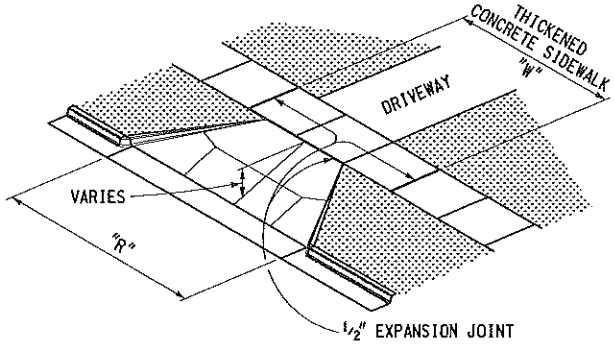

NOTES:

MONOLITHIC CURB IS INCLUDED IN THE CONCRETE DRIVEWAY APPROACH QUANTITY.

REINFORCEMENT IS NOT REQUIRED UNLESS SPECIFIED ON THE PLANS. WHEN REINFORCEMENT IS SPECIFIED, SEE CHART ON THIS SHEET.

CONCRETE DRIVEWAY APPROACH

(TO BE USED WITH DETAIL L OR M)

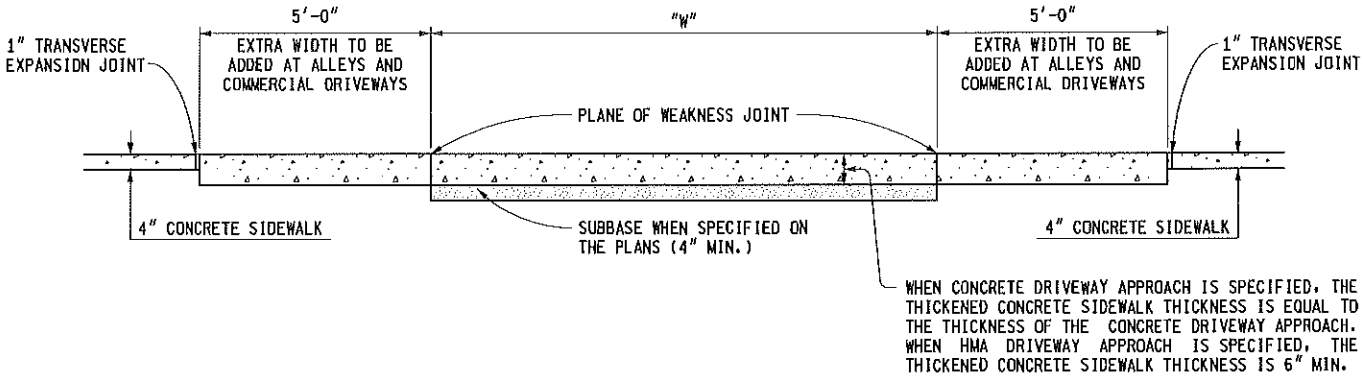

THICKENED CONCRETE SIDEWALK

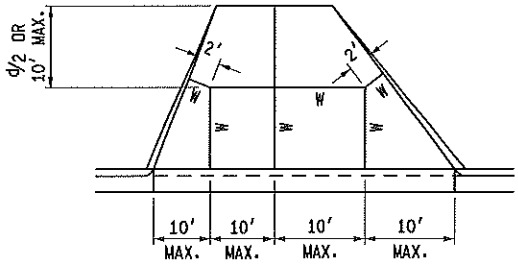

ADJUST DRIVEWAY JOINTS AS NEEDED TO ALIGN WITH ANY COINCIDING TRANSVERSE PAVEMENT JOINTS.

JOINT LAYOUT IS AS INDICATED OR AS DIRECTED BY THE ENGINEER.

INTERMEDIATE DRIVEWAY JOINT DETAILS

REINFORCEMENT FOR CONCRETE DRIVEWAYS		
CONCRETE DRIVEWAY THICKNESS	WIRE SIZE (6" x 6" MESH)	AVERAGE WEIGHT (LBS/100 SFT)
LESS THAN 8"	W1.4	21
	W2.9	42
8" OR GREATER	USE WIRE FABRIC REINFORCEMENT SPECIFIED ON STANDARD PLAN R-37-SERIES	

MICHIGAN DEPARTMENT OF TRANSPORTATION
BUREAU OF HIGHWAY DEVELOPMENT STANDARD PLAN FOR

DRIVEWAY OPENINGS & APPROACHES, AND CONCRETE SIDEWALK

9-30-2014	7-1-2014	R-29-I	SHEET
F.H.W.A. APPROVAL	PLAN DATE		3 OF 4

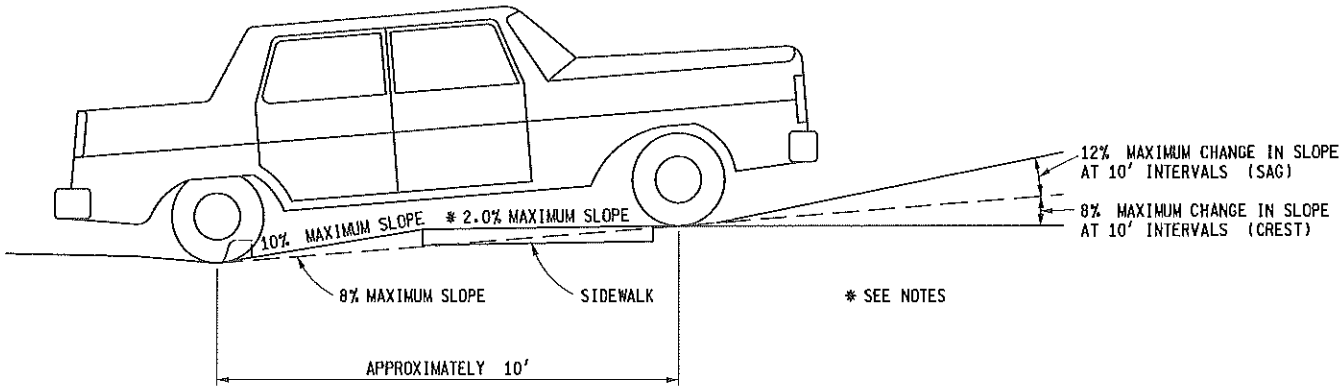

LOW VOLUME COMMERCIAL OR RESIDENTIAL DRIVEWAY SLOPES

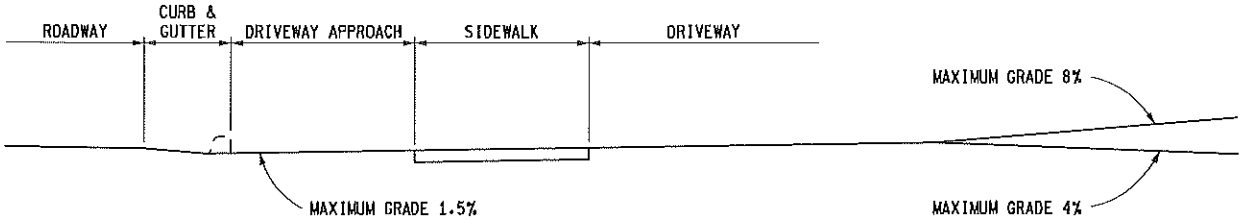

COMMERCIAL DRIVEWAY PROFILE FOR MAJOR TRAFFIC GENERATORS

NOTES:

FOR DRIVEWAY DESIGN REFER ALSO TO "ADMINISTRATIVE RULES REGULATING DRIVEWAYS, BANNERS, AND PARADES ON OR OVER HIGHWAYS" AND GEOMETRIC DESIGN G-680-SERIES, COMMERCIAL DRIVEWAYS.

FOR CURB AND GUTTER DETAILS, SEE STANDARD PLAN R-30-SERIES.

TRANSVERSE SIDEWALK SLOPES ARE TYPICALLY 1.5% (2.0% MAXIMUM). IN ORDER TO MEET SITE CONDITIONS, IF THE TRANSVERSE SLOPE IS REQUIRED TO BE LESS THAN 1.5%, LONGITUDINAL DRAINAGE MUST BE PROVIDED.

WHEN SETTING GRADES FOR COMMERCIAL DRIVES, THE TYPES OF VEHICLES USING THE DRIVE SHOULD BE CONSIDERED.

MICHIGAN DEPARTMENT OF TRANSPORTATION
BUREAU OF HIGHWAY DEVELOPMENT STANDARD PLAN FOR

DRIVEWAY OPENINGS & APPROACHES, AND CONCRETE SIDEWALK

9-30-2014	7-1-2014	R-29-I	SHEET
F.H.W.A. APPROVAL	PLAN DATE		4 OF 4

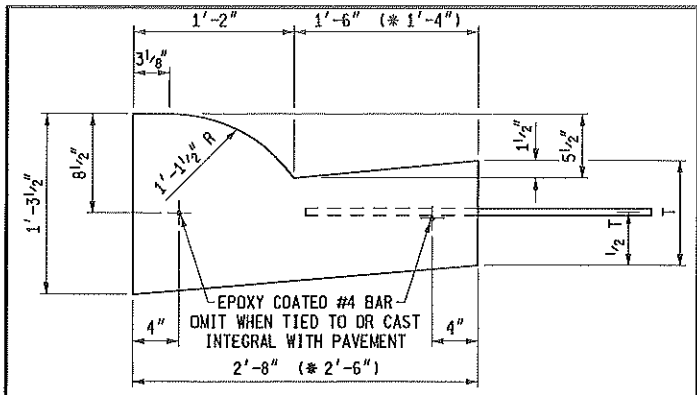

(* GUTTER PAN WIDTH MAY BE REDUCED WHEN APPROVED BY THE ENGINEER)

DETAIL	DIMENSION T	LANE TIES	CONCRETE CYD / LFT	CONCRETE CYD / LFT
B1	9"	AS SHOWN	0.0900	(* 0.0855)
B2	9"	OMITTED	0.0900	(* 0.0855)
B3	10"	AS SHOWN	0.0941	(* 0.0894)

B

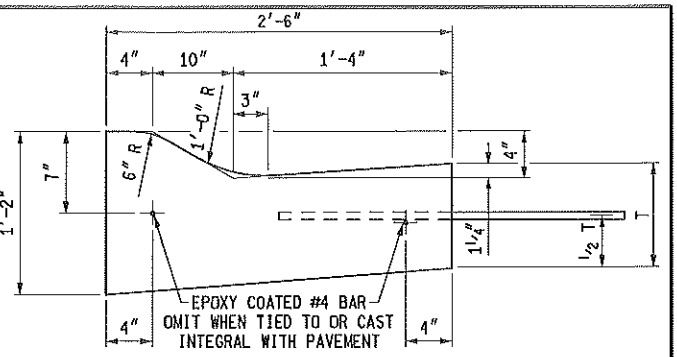

DETAIL	DIMENSION T	LANE TIES	CONCRETE CYD / LFT
D1	9"	AS SHOWN	0.0788
D2	9"	OMITTED	0.0788
D3	10"	AS SHOWN	0.0826

D

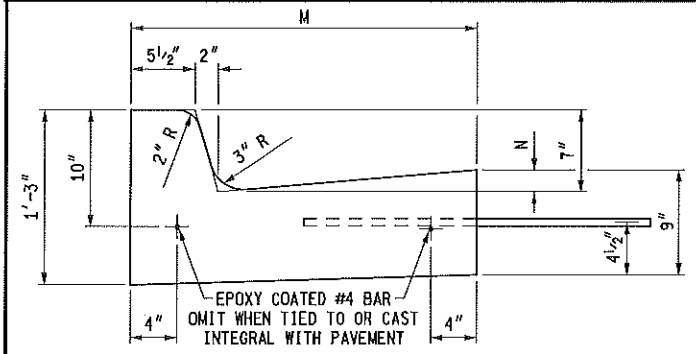

DETAIL	DIMENSION M	DIMENSION N	LANE TIES	CONCRETE CYD / LFT
C1	1'-6"	7/8"	AS SHOWN	0.0506
C2	1'-6"	7/8"	OMITTED	0.0506
C3	2'-0"	1 3/8"	AS SHOWN	0.0632
C4	2'-0"	1 3/8"	OMITTED	0.0632
C5	2'-6"	1 7/8"	AS SHOWN	0.0757
C6	2'-6"	1 7/8"	OMITTED	0.0757

C

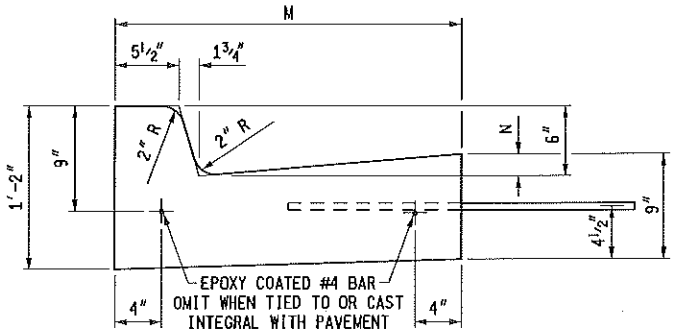

DETAIL	DIMENSION M	DIMENSION N	LANE TIES	CONCRETE CYD / LFT
F1	1'-6"	7/8"	AS SHOWN	0.0484
F2	1'-6"	7/8"	OMITTED	0.0484
F3	2'-0"	1 3/8"	AS SHOWN	0.0610
F4	2'-0"	1 3/8"	OMITTED	0.0610
F5	2'-6"	1 7/8"	AS SHOWN	0.0737
F6	2'-6"	1 7/8"	OMITTED	0.0737

F

* WHEN OTHER THAN 7" (4" MIN. TO 9" MAX.) FACE EXPOSURE IS SPECIFIED ON PLANS, VARY TOTAL CURB HEIGHT AND BATTER ACCORDINGLY

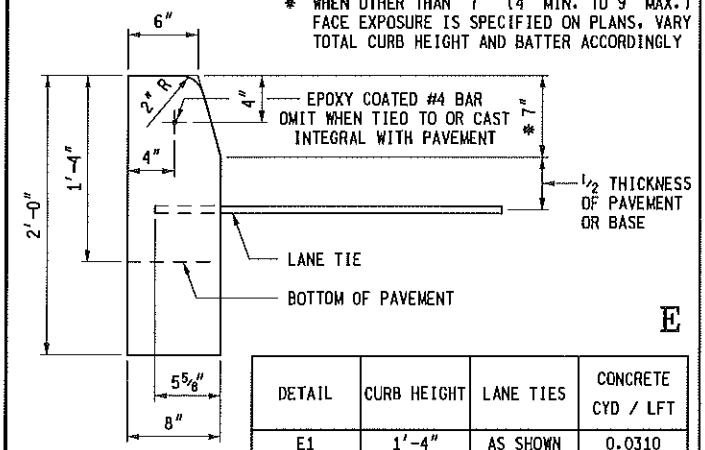

E

DETAIL	CURB HEIGHT	LANE TIES	CONCRETE CYD / LFT
E1	1'-4"	AS SHOWN	0.0310
E2	1'-4"	OMITTED	0.0310
E4	2'-0"	OMITTED	0.0477

MDOT Michigan Department of Transportation

PREPARED BY DESIGN DIVISION

DRAWN BY: B.L.T.

CHECKED BY: W.K.P.

DEPARTMENT DIRECTOR
Kirk T. Steudle

APPROVED BY: Randy Van Portfleet
DIRECTOR, BUREAU OF FIELD SERVICES

APPROVED BY: Mark A. Van Port Fleet
DIRECTOR, BUREAU OF HIGHWAY DEVELOPMENT

MICHIGAN DEPARTMENT OF TRANSPORTATION
BUREAU OF HIGHWAY DEVELOPMENT STANDARD PLAN FOR

CONCRETE CURB AND CONCRETE CURB & GUTTER

9-30-2014	2-6-2014	R-30-G	SHEET
F.H.W.A. APPROVAL	PLAN DATE		1 OF 2

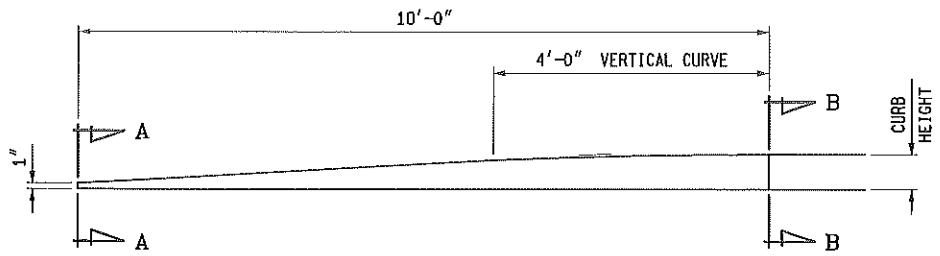

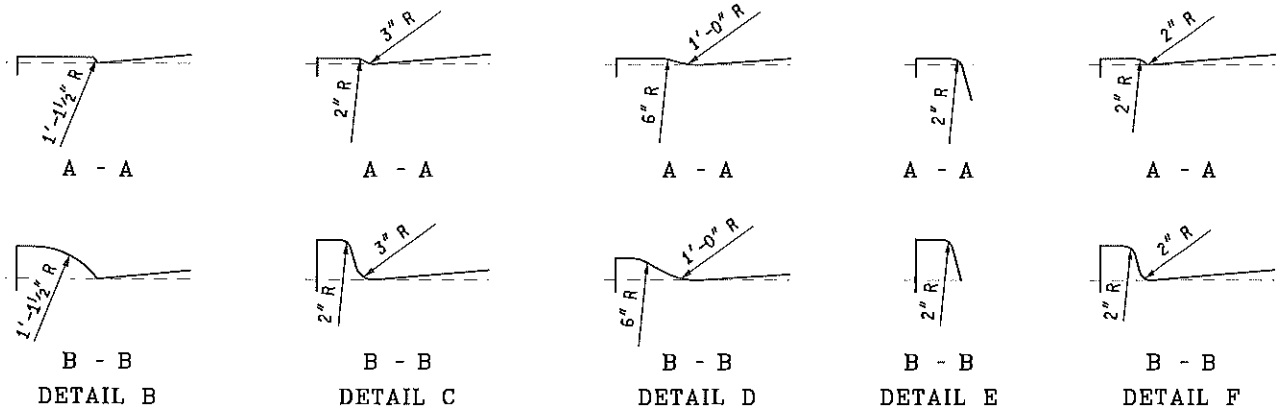

CONCRETE CURB, CURB AND GUTTER ENDINGS

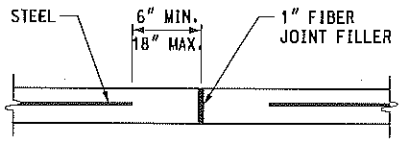

1" FIBER JOINT FILLER

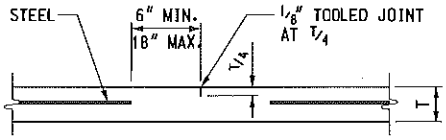

CONTRACTION JOINT

NOTES:

CURB AND GUTTER RADII SHALL BE DIMENSIONED TO THE FRONT EDGE OF THE GUTTER PAN OR EDGE OF PAVEMENT.

CONCRETE CURB AND GUTTER ENDINGS WILL BE PAID FOR IN LINEAR FEET OF THE ADJACENT CURB DETAIL.

JOINTS SHALL BE PLACED AT RIGHT ANGLES TO THE EDGE OF CONCRETE CURB AND GUTTER.

JOINTS DETAILED ON THE PLANS SHALL SUPERSEDE THOSE SPECIFIED ON THIS STANDARD PLAN.

BOTTOM SLOPE OF CURB AND GUTTER STRUCTURE MAY BE THE SAME SLOPE AS BOTTOM OF PAVEMENT. BACK OF CURB AND VERTICAL EDGE OF GUTTER PAN MAY HAVE A MAXIMUM 1/2" BATTER TO FACILITATE FORMING.

WHEN CURB AND GUTTER IS CAST INTEGRALLY, SEE CURRENT STANDARD PLAN R-31-SERIES.

ALL JOINTS FOR CURB OR CURB AND GUTTER ARE INCLUDED IN THE PAY ITEM FOR THE CURB OR CURB AND GUTTER.

JOINTS IN CURB OR CURB AND GUTTER NOT TIED TO CONCRETE PAVEMENT; ADJACENT TO CONCRETE BASE COURSE; OR ADJACENT TO HMA PAVEMENT:

A. PLACE 1" FIBER JOINT FILLER AT 400' MAXIMUM INTERVALS.

B. PLACE 1" FIBER JOINT FILLER AT SPRING POINTS OF INTERSECTING STREETS.

C. PLACE 1/2" ISOLATION JOINT AT CATCH BASINS PER STANDARD PLAN R-37-SERIES.

D. PLACE CONTRACTION JOINTS AT 40' MAXIMUM INTERVALS.

JOINTS IN CURB OR CURB AND GUTTER TIED TO JOINTED PAVEMENT

A. PLACE 1" FIBER JOINT FILLER OPPOSITE ALL TRANSVERSE EXPANSION JOINTS IN PAVEMENT.

B. PLACE 1/2" ISOLATION JOINT AT CATCH BASINS PER STANDARD PLAN R-37-SERIES.

C. PLACE CONTRACTION JOINTS OPPOSITE ALL TRANSVERSE CONTRACTION JOINTS IN PAVEMENT.

D. A SYMBOL (B) JOINT SHALL BE PLACED BETWEEN CURB OR CURB AND GUTTER AND ADJACENT CONCRETE PAVEMENT AS SPECIFIED ON STANDARD PLAN R-41-SERIES.

MICHIGAN DEPARTMENT OF TRANSPORTATION
BUREAU OF HIGHWAY DEVELOPMENT STANDARD PLAN FOR

CONCRETE CURB AND CONCRETE CURB & GUTTER

9-30-2014	2-6-2014	R-30-G	SHEET
F.H.W.A. APPROVAL	PLAN DATE		2 OF 2

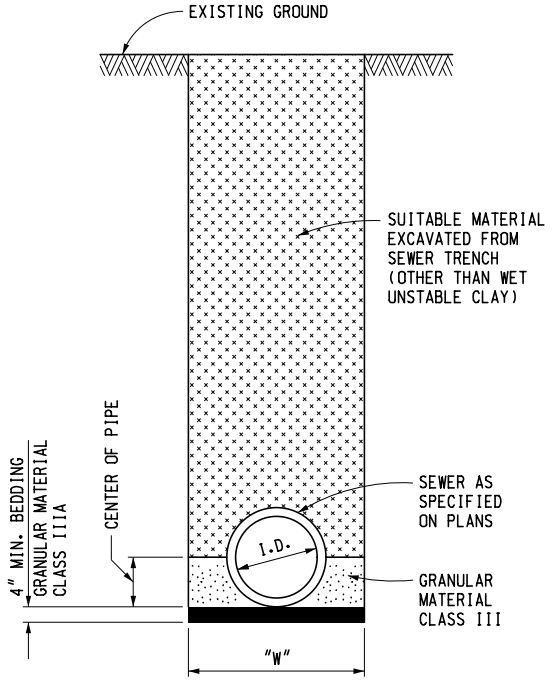

SEWER NOT UNDER ROADBED

CONCRETE

NOTE: FOR "W" SEE NOTES ON SHEET 5

A1

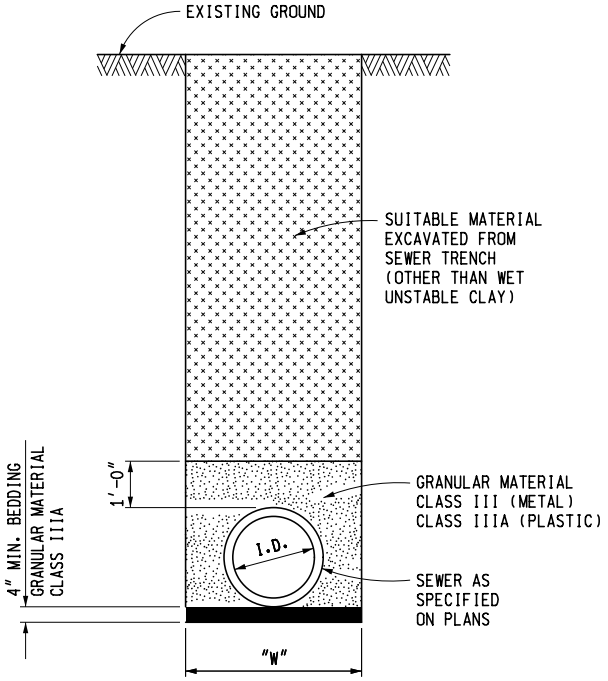

SEWER NOT UNDER ROADBED

METAL & PLASTIC

NOTE: FOR "W" SEE NOTES ON SHEET 5

A2

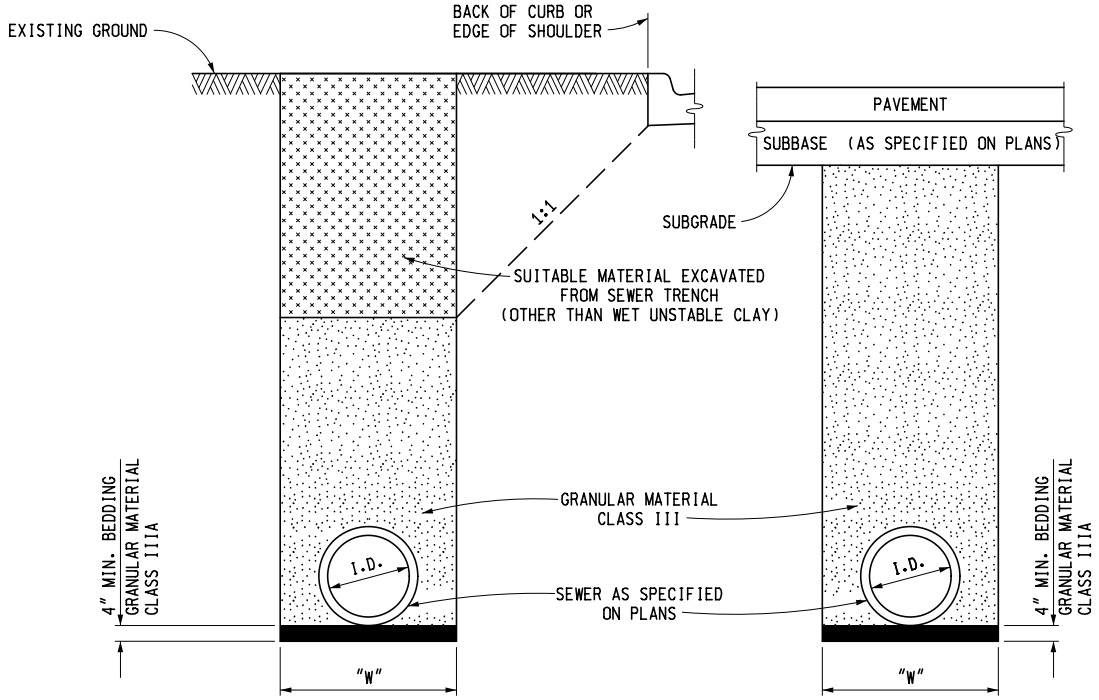

SEWER UNDER ROADBED OR WITHIN INFLUENCE OF ROADBED

CONCRETE & METAL PIPE

B1

MDOT Michigan Department of Transportation

PREPARED BY DESIGN DIVISION

DRAWN BY: B.L.T.

CHECKED BY: W.K.P.

DEPARTMENT DIRECTOR
Kirk T. Steudle

APPROVED BY: _____
DIRECTOR, BUREAU OF FIELD SERVICES

APPROVED BY: _____
DIRECTOR, BUREAU OF DEVELOPMENT

MICHIGAN DEPARTMENT OF TRANSPORTATION
BUREAU OF DEVELOPMENT STANDARD PLAN FOR

UTILITY TRENCHES

F.H.W.A. APPROVAL	9-4-2015 PLAN DATE	R-83-C	SHEET 1 OF 5

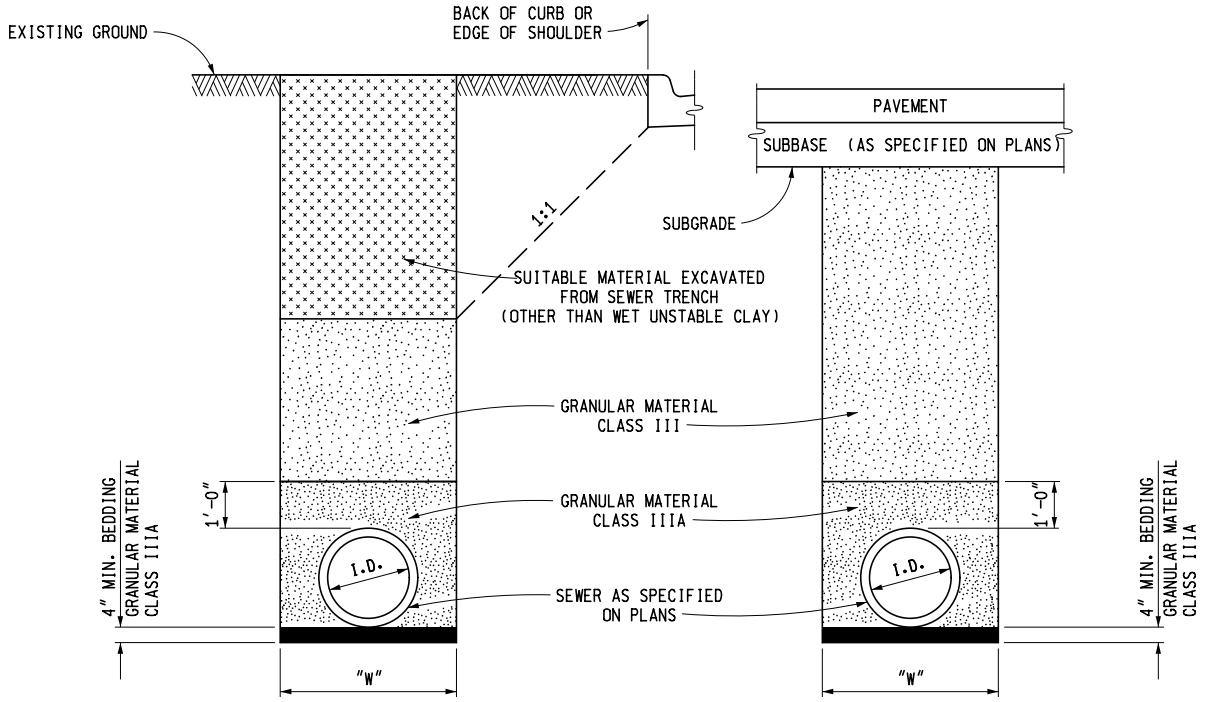

SEWER UNDER ROADBED OR WITHIN INFLUENCE OF ROADBED

PLASTIC PIPE

B2

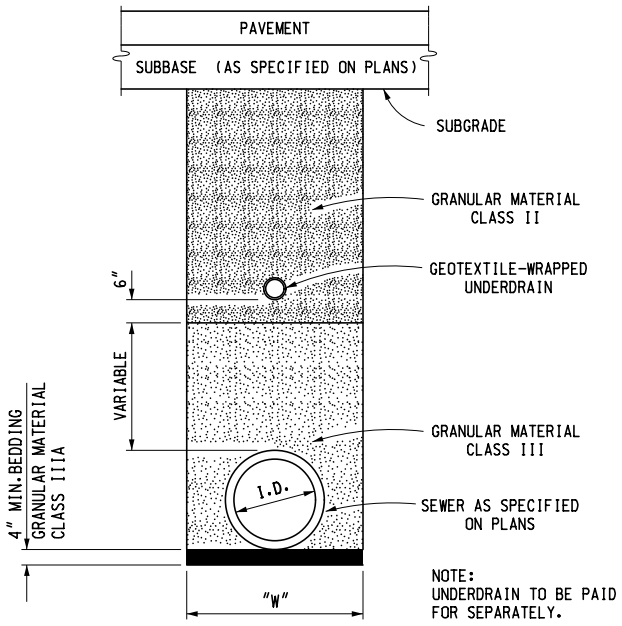

SEWER WITH UNDERDRAIN UNDER ROADBED

CONCRETE & METAL PIPE

C1

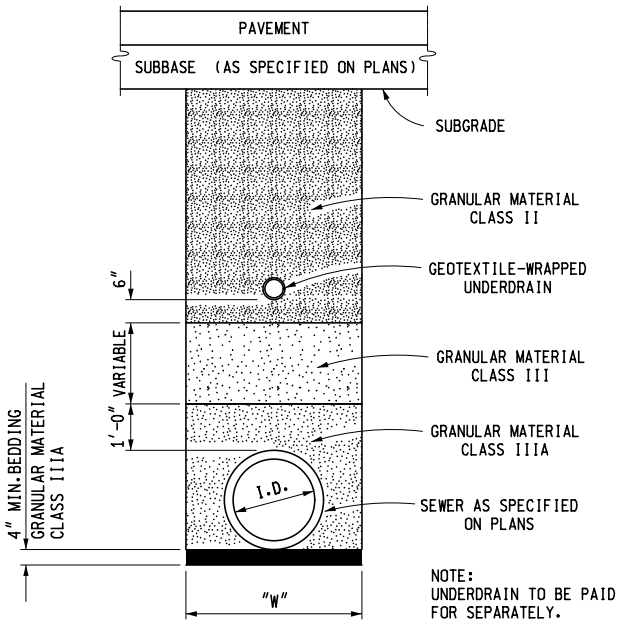

SEWER WITH UNDERDRAIN UNDER ROADBED

PLASTIC PIPE

C2

MICHIGAN DEPARTMENT OF TRANSPORTATION

BUREAU OF DEVELOPMENT STANDARD PLAN FOR

UTILITY TRENCHES

F.H.W.A. APPROVAL	9-4-2015 PLAN DATE	R-83-C	SHEET 2 OF 5

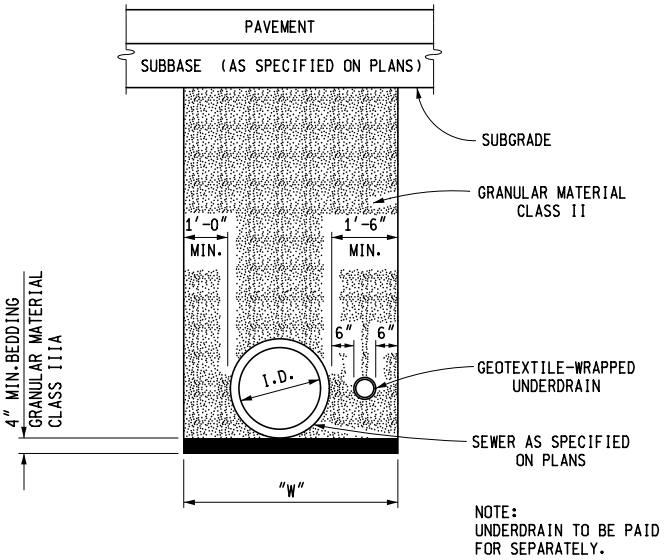

SEWER WITH UNDERDRAIN UNDER ROADBED

CONCRETE & METAL PIPE
(FOR SHALLOW SEWERS)

D1

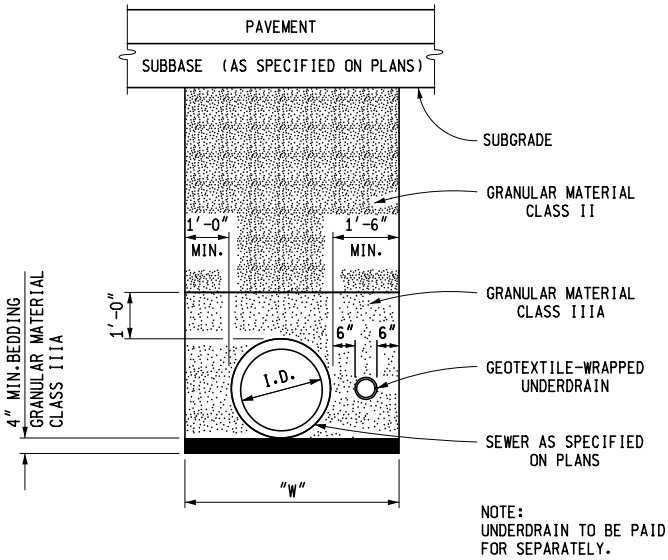

SEWER WITH UNDERDRAIN UNDER ROADBED

PLASTIC PIPE
(FOR SHALLOW SEWERS)

D2

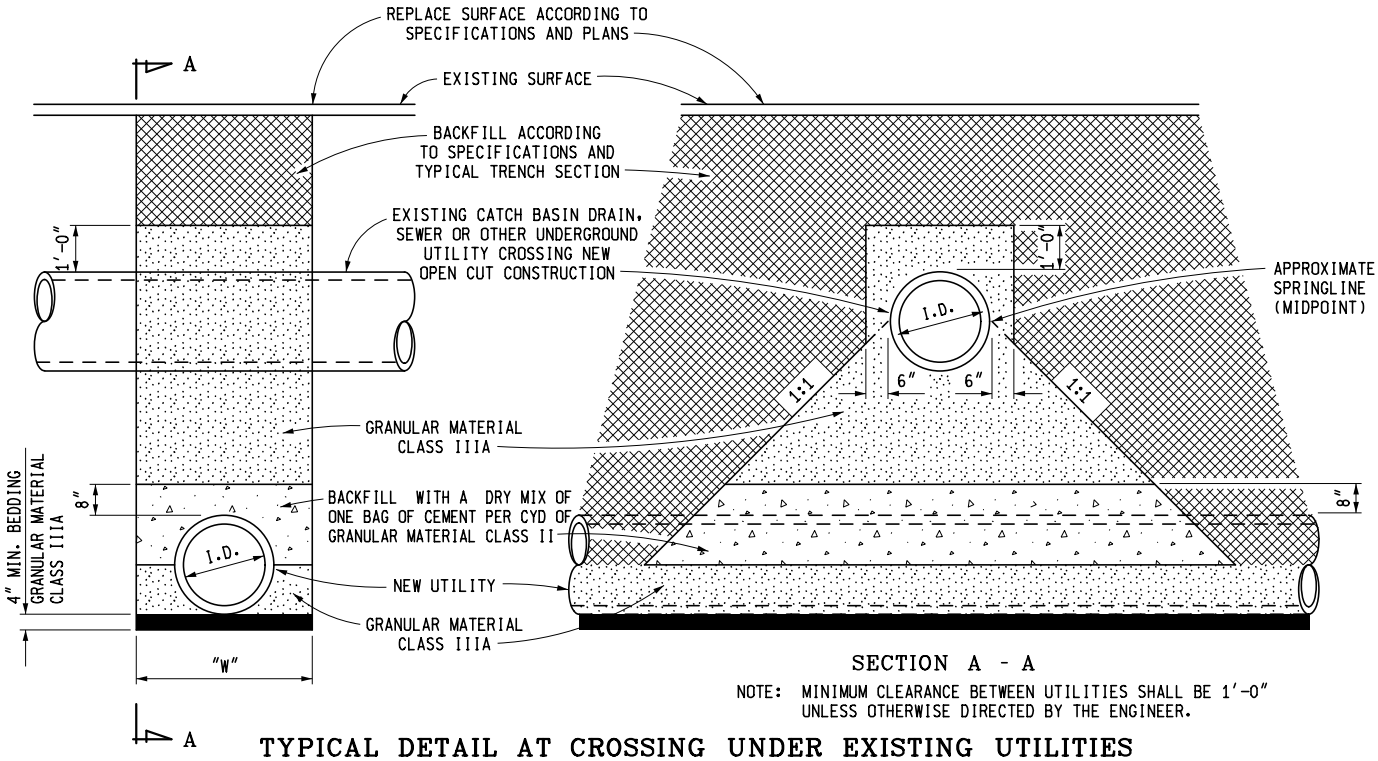

TYPICAL DETAIL AT CROSSING UNDER EXISTING UTILITIES

PAYMENT FOR THIS TRENCH DETAIL WILL BE INCLUDED WITH THE ADJACENT TRENCH DETAILS

E

MICHIGAN DEPARTMENT OF TRANSPORTATION
BUREAU OF DEVELOPMENT STANDARD PLAN FOR

UTILITY TRENCHES

F.H.W.A. APPROVAL	9-4-2015 PLAN DATE	R-83-C	SHEET 3 OF 5

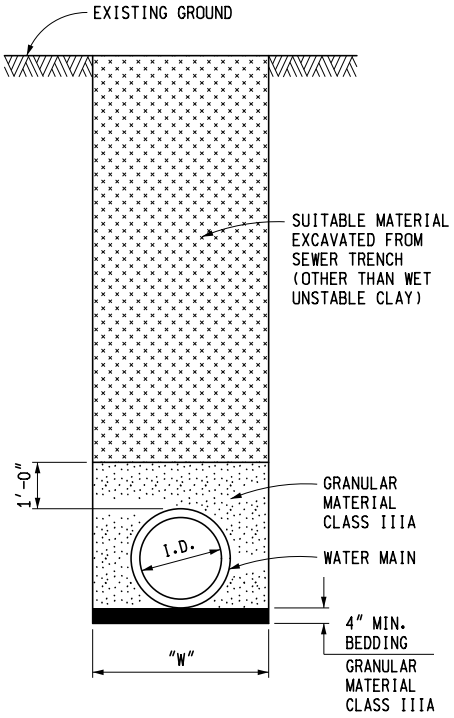

WATER MAINS NOT UNDER ROADBED

F

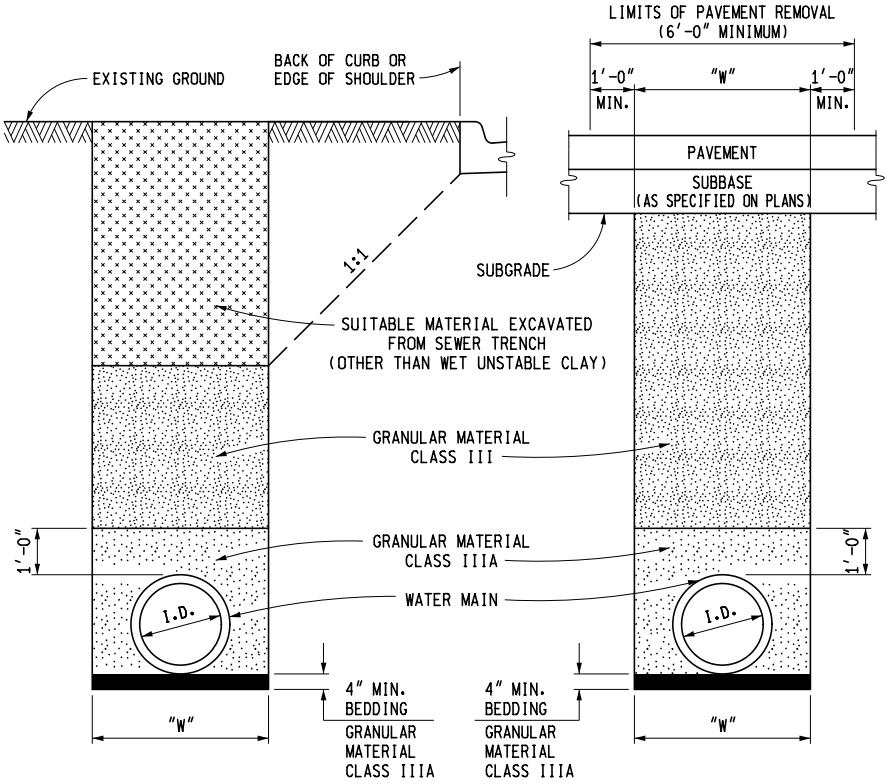

NOTE: WHEN WATER MAIN IS PLACED IN PROPOSED ROADBED AREA, IT SHALL BE BACKFILLED WITH SELECTED EXCAVATION MATERIAL ABOVE FUTURE SUBGRADE TO EXISTING GROUND LINE.

WATER MAINS UNDER ROADBED OR WITHIN INFLUENCE OF ROADBED

G

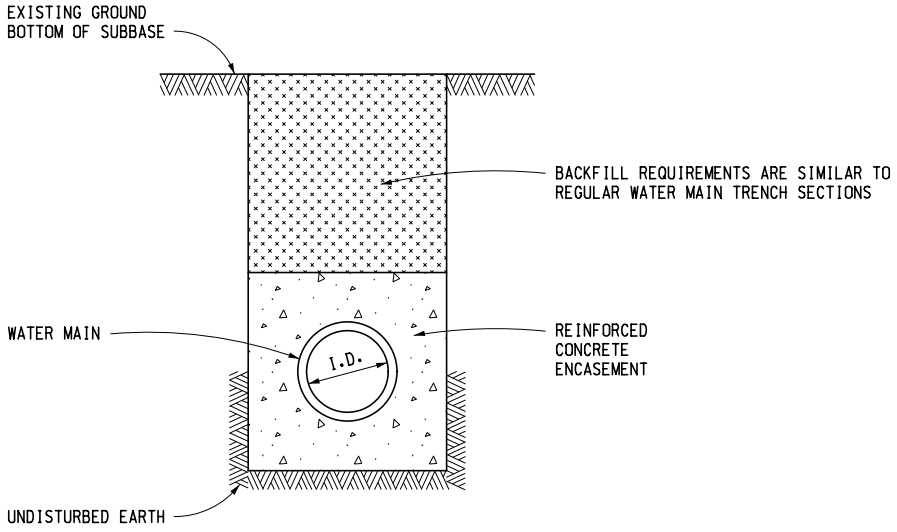

REQUIRED ENCASEMENT SIZE FOR RESPECTIVE PIPE SIZES	
DIAMETER OF PIPE	ENCASEMENT SIZE AND TRENCH WIDTH
6" - 12"	3'-0"
16"	3'-6"
24"	4'-6"
30"	5'-0"
36"	5'-6"
42"	6'-0"
48"	7'-0"
54"	7'-6"
60"	8'-0"
66"	8'-6"
72"	9'-0"

NOTE:
REINFORCEMENT SHALL BE AS SPECIFIED ON PLANS.

WATER MAINS IN REINFORCED CONCRETE ENCASEMENT

H

MICHIGAN DEPARTMENT OF TRANSPORTATION
BUREAU OF DEVELOPMENT STANDARD PLAN FOR

UTILITY TRENCHES

F.H.W.A. APPROVAL	9-4-2015 PLAN DATE	R-83-C	SHEET 4 OF 5

NOTES:

BACKFILLING SHALL BE ACCORDING TO THE STANDARD SPECIFICATION.

SUFFICIENT TRENCH WIDTH SHALL BE PROVIDED TO ALLOW FREE WORKING SPACE AND TO PERMIT COMPACTING THE BACKFILL AROUND THE PIPE.

THE FOLLOWING ARE MINIMUM TRENCH WIDTHS:

I.D. PIPE SIZE (INCHES)	LESS THAN 18	21	24	30	36
"W" TRENCH WIDTH (FEET)	3.0	3.5	4.0	5.0	6.0

I.D. PIPE SIZE (INCHES)	42	48	54	60	66	72
"W" TRENCH WIDTH (FEET)	7.0	8.0	9.5	10.0	10.5	11.0

I.D. PIPE SIZE (INCHES)	78	84	90	96	102	108
"W" TRENCH WIDTH (FEET)	11.5	12.0	12.5	13.0	13.5	14.0

ESTIMATED PAVEMENT REMOVAL WIDTH IS TO BE TRENCH WIDTH "W" PLUS 1'-0" EACH SIDE OF THE TRENCH (6'-0" MINIMUM).

MICHIGAN DEPARTMENT OF TRANSPORTATION
BUREAU OF DEVELOPMENT STANDARD PLAN FOR

UTILITY TRENCHES

F.H.W.A. APPROVAL	9-4-2015 PLAN DATE	R-83-C	SHEET 5 OF 5

APPLICABLE SOIL EROSION AND SEDIMENTATION CONTROL MEASURES

(COMPREHENSIVE DETAILS ARE LOCATED IN SECTION 6 OF THE SOIL EROSION & SEDIMENTATION CONTROL MANUAL)

A = SLOPES

B = STREAMS AND WATERWAYS

C = SURFACE DRAINAGEWAYS

D = ENCLOSED DRAINAGE (INLET & OUTFALL CONTROL)

E = LARGE FLAT SURFACE AREAS

F = BORROW AND STOCKPILE AREAS

G = DNRE PERMIT MAY BE REQUIRED

KEY	DETAIL	CHARACTERISTICS	A	B	C	D	E	F	G
1	TURBIDITY CURTAIN	A Turbidity Curtain is used when slack water area is necessary to isolate construction activities from the watercourse. The still water area contains the sediments within the construction limits.		●					
2	GRUBBING OMITTED	Retains existing root mat which assists in stabilizing slopes. Assists in the revegetation process by providing sprout growth. Reduces sheet flow velocities preventing rilling and gullying. Discourages off-road vehicle use.	●				●		
3	PERMANENT/TEMPORARY SEEDING	Inexpensive but effective erosion control measure to stabilize flat areas and mild slopes. Permits runoff to infiltrate soil, reducing runoff volumes. Proper preparation of the seed bed, fertilizing, mulching and watering is critical to its success.	●		●		●	●	
4	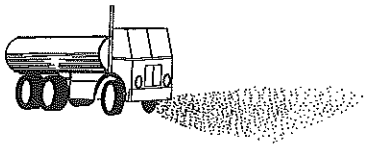 DUST CONTROL	Dust control can be accomplished by watering, and/or applying calcium chloride. The disturbed areas should be kept to a minimum. PERMANENT/TEMPORARY SEEDING (KEY 3) should be applied as soon as possible.	●				●	●	
5	SODDING	Provides immediate vegetative cover such as at spillways and ditch bottoms. Proper preparation of the topsoil, placement of the sod, and watering is critical to its success.	●				●	●	
6	VEGETATED BUFFER STRIPS	Reduces sheet flow velocities preventing rilling and gullying. Assists in the collection of sediments by filtering runoff. Assists in the establishment of a permanent vegetative cover.	●				●		

MDOT Michigan Department of Transportation

PREPARED BY DESIGN DIVISION

DRAWN BY: B.L.T.

CHECKED BY: W.K.P.

DEPARTMENT DIRECTOR
Kirk T. Steudle

APPROVED BY: John C. Friend
ENGINEER OF DELIVERY

APPROVED BY: Mark A. Van Port Flee
ENGINEER OF DEVELOPMENT

222

MICHIGAN DEPARTMENT OF TRANSPORTATION
BUREAU OF HIGHWAY DEVELOPMENT STANDARD PLAN FOR

SOIL EROSION & SEDIMENTATION CONTROL MEASURES

9-10-2010	6-3-2010	R-96-E	SHEET
F.H.W.A. APPROVAL	PLAN DATE		1 OF 6

KEY	DETAIL	CHARACTERISTICS	A	B	C	D	E	F	G
7	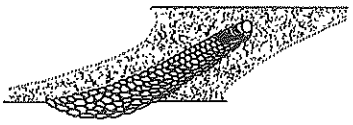 RIPRAP	Used where vegetation cannot be established. Very effective in protecting against high velocity flows. Should be placed over a geotextile liner.	●	●	●	●			●
8	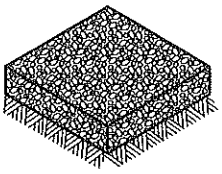 AGGREGATE COVER	Can be used in any area where a stable condition is needed for construction operations, equipment storage or in heavy traffic areas. Reduces potential soil erosion and fugitive dust by stabilizing raw areas.	●				●	●	
9	BENCHES	Reduces sheet flow velocities preventing rilling and gullying. Assists in the collection and filtering of sediments. Provides access for stabilizing slopes.	●					●	
10	DIVERSION DIKE	Assists in the diversion of runoff to a stable outlet or sediment control device. Reduces sheet flow velocities preventing rilling and gullying. Collects and diverts runoff to properly stabilized drainage ways. Works well with INTERCEPTING DITCH (KEY 11)	●				●	●	
11	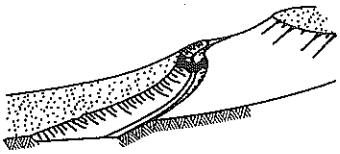 INTERCEPTING DITCH	Assists in the diversion of runoff to a stable outlet or sediment control device. Reduces sheet flow velocities preventing rilling and gullying. Works well with DIVERSION DIKE (KEY 10)	●				●	●	
12	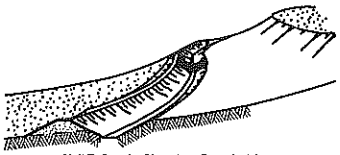 INTERCEPTING DITCH AND DIVERSION DIKE	Assists in the diversion of runoff to a stable outlet or sediment control device. Reduces sheet flow velocities preventing rilling and gullying.	●				●	●	
13	GRAVEL FILTER BERM	Useful in filtering flow prior to its reentry into a lake, stream or wetland. Works well with SEDIMENT TRAP (KEY 20) and TEMPORARY BYPASS CHANNEL (KEY 35). Not to be used in lieu of a CHECK DAM (KEY 37) in a ditch.	●		●			●	
14	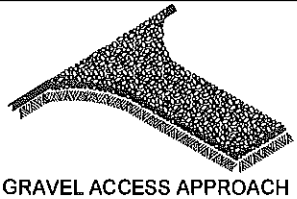 GRAVEL ACCESS APPROACH	Provides a stable access to roadways minimizing fugitive dust and tracking of materials onto public streets and highways. .					●	●	

MICHIGAN DEPARTMENT OF TRANSPORTATION
BUREAU OF HIGHWAY DEVELOPMENT STANDARD PLAN FOR

SOIL EROSION & SEDIMENTATION CONTROL MEASURES

9-10-2010	6-3-2010	R-96-E	SHEET
F.H.W.A. APPROVAL	PLAN DATE		2 OF 6

KEY	DETAIL	CHARACTERISTICS	A	B	C	D	E	F	G
15	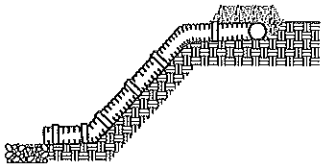 SLOPE DRAIN SURFACE	Excellent device for carrying water down slopes without creating an erosive condition. Generally used in conjunction with DIVERSION DIKE (KEY 10), INTERCEPTING DITCH (KEY 11) and INTERCEPTING DITCH AND DIVERSION DIKE (KEY 12) to direct flow to a stable discharge area or SEDIMENT TRAP (KEY 20).	●		●				
16	TREES, SHRUBS AND PERENNIALS	Trees, shrubs and perennials can provide low maintenance long term erosion protection. These plants may be particularly useful where site aesthetics are important along the roadside slopes.	●				●		
17	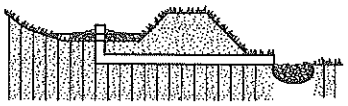 PIPE DROP	Effective way to allow water to drop in elevation very rapidly without causing an erosive condition. Also works as a sediment collector device. May be left in place as a permanent erosion control device.	●		●				
18	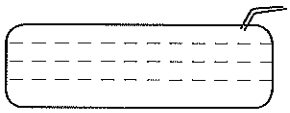 DEWATERING WITH FILTER BAG	It may be necessary to dewater from behind a cofferdam or construction dam to create a dry work site. Discharged water must be pumped to a filter bag. A GRAVEL FILTER BERM (KEY 13) may be placed downslope of the filter bag to provide additional filtration prior to entering any stream or wetland.		●					●
19	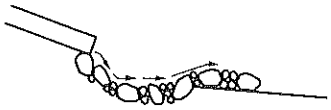 ENERGY DISSIPATORS	A device to prevent the erosive force of water from eroding soils. Used at outlets of culverts, drainage pipes or other conduits to reduce the velocity of the water. Prevents structure scouring and undermining.	●	●	●	●			
20	SEDIMENT TRAP	Used to intercept concentrated flows and prevent sediments from being transported off site or into a watercourse or wetland. The size of a Sediment Trap is 5 cubic yards or less. Works well when used with CHECK DAM (KEY 37).	●		●	●			
21	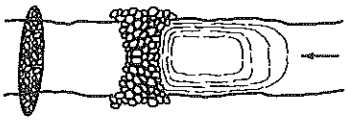 SEDIMENT BASIN	A Sediment Basin is used to trap sediments from an upstream construction site. Requires periodic inspections, repairs, and maintenance. Where practical, sediments should be contained on site. A Sediment Basin should be the last choice of sediment control. The size of a Sediment Basin is greater than 5 cubic yards.		●					●
22	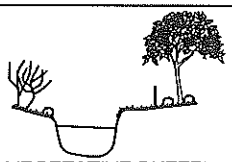 VEGETATIVE BUFFER AT WATERCOURSE	This practice is used to maintain a vegetative buffer adjacent to a watercourse. When utilized with SILT FENCE (KEY 26) it will, under normal circumstances, prevent sediment from leaving the construction site.	●	●	●		●	●	

MICHIGAN DEPARTMENT OF TRANSPORTATION
BUREAU OF HIGHWAY DEVELOPMENT STANDARD PLAN FOR

SOIL EROSION & SEDIMENTATION CONTROL MEASURES

9-10-2010	6-3-2010	R-96-E	SHEET
F.H.W.A. APPROVAL	PLAN DATE		3 OF 6

KEY	DETAIL	CHARACTERISTICS	A	B	C	D	E	F	G
23	STREAM RELOCATION	A detail depicting the proper procedures for stream relocation. Maintains same width, depth, and flow velocity as the natural stream. Revegetate banks with PERMANENT/TEMPORARY SEEDING (KEY 3), MULCHING AND MULCH ANCHORING (KEY 28), MULCH BLANKETS AND HIGH VELOCITY MULCH BLANKETS (KEY 33) and woody plants to shade the stream.		●					●
24	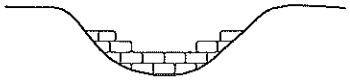 SAND AND STONE BAGS	Sand and stone bags are a useful tool in the prevention of erosion. Can be used to divert water around a construction site by creating a DIVERSION DIKE (KEY 10). Works well for creating a CONSTRUCTION DAM (KEY 36) and temporary culvert end fill.	●	●	●	●	●	●	●
25	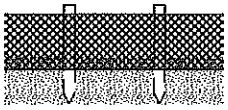 SAND FENCE AND DUNE STABILIZATION	A Sand Fence traps blowing sand by reducing wind velocities. Can be used to prevent sand from blowing onto roads. Must be maintained until sand source is stabilized.	●				●	●	
26	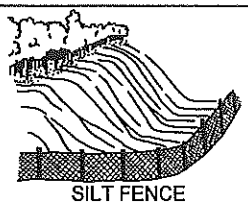 SILT FENCE	A permeable barrier erected below disturbed areas to capture sediments from sheet flow. Can be used to divert small volumes of water to stable outlets. Ineffective as a filter and should never ba placed across streams or ditches where flow is concentrated.	●				●	●	
27	PLASTIC SHEETS OR GEOTEXTILE COVER	Plastic Sheets can be used to create a liner in temporary channels. Can also be used to create a temporary cover to prevent erosion of stockpiled materials.	●	●	●			●	
28	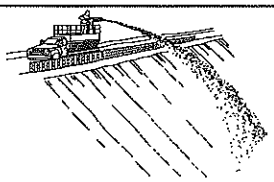 MULCHING AND MULCH ANCHORING	Anchored mulch provides erosion protection against rain and wind. Mulch must be used on seeded areas to promote water retention and growth. Should be inspected after every rainstorm and repaired as necessary until vegetation is well established.	●		●		●	●	
29	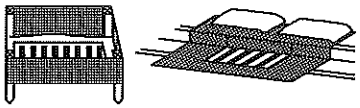 INLET PROTECTION FABRIC DROP	Provides settling and filtering of silt laden water prior to its entry into the drainage system. Can be used in median and side ditches where vegetation will be disturbed. Allows for early use of drainage systems prior to project completion.			●		●		
30	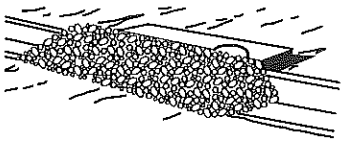 INLET PROTECTION GEOTEXTILE AND STONE	Provides settling and filtering of silt laden water prior to its entry into the drainage system. Should be used in paved areas where drainage structures are existing or proposed. Allows for early use of drainage systems prior to project completion.			●		●		

MICHIGAN DEPARTMENT OF TRANSPORTATION
BUREAU OF HIGHWAY DEVELOPMENT STANDARD PLAN FOR

SOIL EROSION & SEDIMENTATION CONTROL MEASURES

9-10-2010	6-3-2010	R-96-E	SHEET
F.H.W.A. APPROVAL	PLAN DATE		4 OF 6

KEY	DETAIL	CHARACTERISTICS	A	B	C	D	E	F	G
31	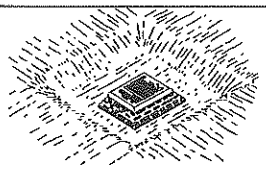 INLET PROTECTION SEDIMENT TRAP	An Inlet Protection Sediment Trap is a temporary device that can be used in areas where medium flows are anticipated. Effective in trapping small quantities of sediments prior to water entering the drainage system. Can be used in areas such as median and side ditchas.			●		●		
32	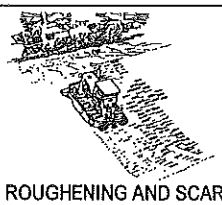 SLOPE ROUGHENING AND SCARIFICATION	A simple and economical way to reduce soil erosion by wind and water. Can be accomplished by harrowing with a disk, back blading, or tracking with a dozer perpendicular to the slope.	●				●	●	
33	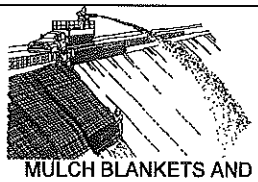 MULCH BLANKETS AND HIGH VELOCITY MULCH BLANKETS	Mulch blankets provide an immediate and effective cover over raw erodible slopes affording excellent protection against rain and wind erosion. High velocity mulch blankets work well for stabilizing the bottom of ditches in waterways.	●		●		●	●	
34	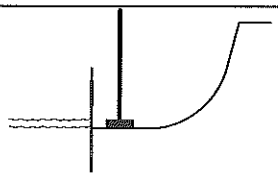 COFFERDAM	Used to create a dry construction area and protect the stream from raw erodible areas. Must be pumped dry or dewatered according to DEWATERING WITH FILTER BAG (KEY 18).		●					●
35	TEMPORARY BYPASS CHANNEL	Utilized when a dry construction area is needed. Isolates stream flows from raw erodible areas minimizing erosion and subsequent siltation. Can incorporate SEDIMENT BASIN (KEY 21), CHECK DAM (KEY 37), and GRAVEL FILTER BERM (KEY 13) to remove sediments from water. Construction sequence of events may be necessary.		●					●
36	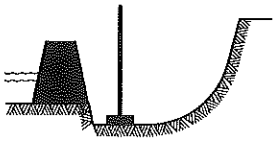 CONSTRUCTION DAM	Used to create a dry or slack water area for construction. Isolates the stream from raw erodible arees. Can be created out of any non-erodible materials such as SAND AND STONE BAGS (KEY 24), a gravel dike with clay core or plastic liner, steel plates or plywood.		●					●
37	CHECK DAM	Can be constructed across ditchas or any area of concentrated flow. Protects vegetation in early stages of growth. A Check Dam is intended to reduce water velocities and capture sediment. A Check Dam is not a filtering device.	●		●			●	

MICHIGAN DEPARTMENT OF TRANSPORTATION
BUREAU OF HIGHWAY DEVELOPMENT STANDARD PLAN FOR

SOIL EROSION & SEDIMENTATION CONTROL MEASURES

9-10-2010	6-3-2010	R-96-E	SHEET
F.H.W.A. APPROVAL	PLAN DATE		5 OF 6

NOTES:

THIS STANDARD PLAN WILL SERVE AS A KEY IN THE SELECTION OF THE APPROPRIATE SOIL EROSION AND SEDIMENTATION CONTROL DETAILS. THIS PLAN ALSO PROVIDES THE KEY TO THE NUMBERED EROSION CONTROL ITEMS SPECIFIED ON THE CONSTRUCTION PLANS. REFER TO THE MDOT SOIL EROSION & SEDIMENTATION CONTROL MANUAL, SECTION 6 FOR SPECIFIC DETAILS, CONTRACT ITEMS (PAY ITEMS), AND PAY UNITS.

COLLECTED SILT AND SEDIMENT SHALL BE REMOVED PERIODICALLY TO MAINTAIN THE EFFECTIVENESS OF THE SEDIMENT TRAP, SEDIMENT BASIN, AND SILT FENCE. AGGREGATES PLACED IN STREAMS SHOULD CONTAIN A MINIMUM OF FINES.

TEMPORARY EROSION AND SEDIMENTATION CONTROL PROVISIONS SHALL BE COORDINATED WITH THE PERMANENT CONTROL MEASURES TO ASSURE EFFECTIVE CONTROL OF SEDIMENTS DURING CONSTRUCTION OF THE PROJECT.

ALL TEMPORARY EROSION CONTROL DEVICES SHALL BE REMOVED AFTER VEGETATION ESTABLISHMENT OR AT THE DISCRETION OF THE ENGINEER. CARE SHALL BE TAKEN DURING REMOVAL TO MINIMIZE SILTATION IN NEARBY DRAINAGE COURSES.

MICHIGAN DEPARTMENT OF TRANSPORTATION
BUREAU OF HIGHWAY DEVELOPMENT STANDARD PLAN FOR

SOIL EROSION & SEDIMENTATION CONTROL MEASURES

9-10-2010	6-3-2010	R-96-E	SHEET
F.H.W.A. APPROVAL	PLAN DATE		6 OF 6

APPENDICIES

PRE-BID DOCUMENTS

SIGNED BIDDER DOCUMENTS

SIGNED AGREEMENT DOCUMENTS

CERTIFICATE OF LIABILITY INSURANCE

LETTER OF APPROVAL FROM ATTORNEY